Principles of Checkweighing

A Guide to the Application and Selection of Checkweighers

Third Edition

HI-SPEED
A Mettler Toledo Company
"We Wrote The Book on Checkweighing"

1 Introduction

Welcome to the Principles of Checkweighing. Hi-Speed first introduced "The Principles of Checkweighing" booklet in 1976. For years the booklets have been used by prospective and present checkweigher users, Weights and Measures officials, and the academic community. This Third Edition expands on the basics of checkweighing and includes the more recent developments in packaging and checkweighing.

This book is intended to:

- Educate the packaging industry on the basics of checkweighing
- Describe the uses of checkweighing
- Outline possible system requirements
- Guide the user or buyer to select the best checkweigher system for a particular application
- Serve as a reference guide to checkweighing

What is a Checkweigher?

A checkweigher is a system that weighs items as they pass through a production line, classifies the items by preset weight zones, and ejects or sorts the items based on their classification. Checkweighers weigh 100% of the items on a production line.

Typically, an infeed section, scale section, discharge section, rejector or line divider, and computerized control comprise the physical checkweighing system. Checkweighers and their components vary greatly according to how they are used, the items being weighed, and the environment surrounding them.

"Simply stated, a checkweigher weighs, classifies, and segregates items by weight."

Typical Uses of a Checkweigher

Many possible uses for a checkweigher include:

- Check for under and/or overweight filled packages
- Insure compliance with net contents laws for pre-packaged goods
- Check for missing components in a package including labels, instructions, lids, coupons, or products
- Verify count by weight by checking for a missing carton, bottle, bag, or can in a case
- Check package mixes against weight limits to keep the solid to liquid ratio within established standards
- Reduce product giveaway by using checkweigher totals to determine filler adjustments
- Classify products into weight grades
- Insure product compliance with customer, association, or agency specifications
- Weigh before and after a process to check process performance
- Fulfill USDA or FDA reporting standards
- Measure and report production line efficiency

Statistical Uses of a Checkweigher

Example:
Consider a line running 100 packages per minute. If someone samples 15 packages every hour, what percentage of the total production is that sample? In 60 minutes, 60x100 = 6000 packages go through the line. 15 packages represents only 15/6000 = 0.25%. With a sample size that small,

Today's technology makes checkweighers more reliable and accurate than ever before. The information that a Quality team had to collect by hand can now be collected in the blink of an eye by the checkweigher system.

The primary value in checkweighing is in achieving "100 % sampling" compared to intermittent sampling off-line.

Statistical uses of a checkweigher include:

- Analyze production by weight zone or classification
- Use 5 or more zones to get detailed fill weight information
- Monitor overall production efficiency through total count and total weight
- Monitor overall production speed efficiency (items per minute)
- Monitor standard deviation to alert operator or filler of an out of tolerance condition

- Keep production printouts as a record of settings for management and regulatory agencies
- Analyze filler head performance for both single and multi-head fillers
- Print production totals for a day, shift, hour, batch or product run
- Monitor short and long-term filler performance through statistics
- Provide Statistical Process Control (SPC) charts for manual feedback and process adjustments
- Provide SPC for closed loop control, feedback, and automatic process adjustments
- Link packaging line data to upstream control and information systems
- Interface with computers and Programmable Logic Controllers (PLCs) to link the checkweigher to the production process, including controling the checkweigher through a remote PLC station
- Save Quality Control labor

> The primary value of checkweighing is "100% sampling."

Inspection

Checkweighers are used for additional inspection purposes, beyond those stated above. The checkweigher is increasingly becoming a quality assurance station, and integrates other automated inspection devices to check:

- Open flaps on a carton or case
- Missing caps
- Bar code labels
- Metal contaminants

Why is Checkweighing Necessary?

Packaging and processing companies generally refer to the checkweigher as a "policeman" on the packaging line. It is the weight control center on a production line, and protects against unacceptable under or overweight packages ever reaching the customer.

Hint: You can obtain copies of *Handbook 133* from the U.S. Government Printing Office in Washington, DC 20402-9325

The Department of Commerce National Institute of Standards and Technology's (NIST) *Handbook 133* on prepackaged goods defines the specific net contents laws on packages for processors, wholesalers, and retailers. In addition, the where, what, and how's of testing and sampling procedures are dealt with in detail. It specifies the minimum number of packages to be inspected and defines lot sizes, as well as the number of packages to be opened to determine the tare weight value. It specifies the number of underweight packages allowed, as well as the weight of packages allowed to be underweight not exceeding the Maximum Allowable Variation (MAV).

For prepackaged items commonly weighed by checkweighers, the MAV varies according to package weight. NIST *Handbook 133* defines the MAV in weight gradations for prepackaged goods.

State Weights and Measures offices regulate and enforce the net content laws defined by NIST. Official action resulting from package checking can take the form of oral recommendations, instructions, warnings, or legal action.

An oral discussion between the inspector and the person in charge of the establishment may indicate general compliance with laws and regulations. The discussion may also point out inconsistencies in weighing patterns, precision, or variations worse than the inspector has encountered in other similar packages.

NIST Regulations on Net Contents

If the checking procedure uncovers any of the non-conformances listed in this section, the organization has violated legal requirements, and the inspection may indicate a need for punitive action:

- One or more packages with unreasonably large minus errors
- An average minus error for the entire lot of packages

- Significant errors in selling price computations of one or more packages (for weigh price labeling)

Legal Actions Against Non-conforming Organizations

Legal action may take several forms, as the law in the particular jurisdiction provides, per instructions from a supervisor, or as good judgment dictates:

- “Stop sale” or “off sale” orders, which normally provide the lot cannot be offered for sale until officially released
- Re-weighing or remarking orders, which provide that an entire lot cannot be offered for sale until the content or labeling have been corrected (applicable only to random packages, not standard-pack)
- Prosecution, in which case the inspector purchases or confiscates samples as evidence of violation

Intelligent application of checkweighing and weight control techniques can allow the packaging manufacturer to virtually eliminate legal problems and consumer complaints about underweight packages. Well-designed and maintained checkweigher systems can also help the manufacturer significantly reduce overweight costs by reducing the average fill weight through improved checkweigher accuracy or feedback to the filling process.

Where Should You Use a Checkweigher?

Organizations generally use checkweighers at the end of a production line, before or after packaging a product. Manufacturers use checkweighers after a filler to verify proper fills, or as a counter after a bagger or cartoner to ensure there are no missing or extraneous parts.

What Items Do Checkweighers Typically Weigh?

A checkweigher can be, and probably has been used to weigh almost any produced item you can think of, ranging in weights from a gram to several hundred pounds. Table 1: Checkweigher ApplicationsTable 1 offers a few examples of items which organizations weigh on checkweighers.

Table 1: Checkweigher Applications

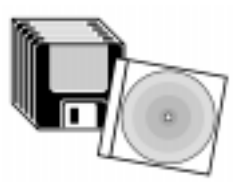	CDs, boxed disks, and other cartons to determine if missing papers, instructions, or other items
	Count by weight pills in a bottle or nuts and bolts in a bag, cases of batteries, or drink bottles
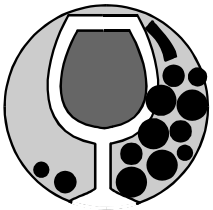	Check volume or density of a mixture, like bread, yogurt, or volatile products such as airbag charges to measure appropriate volume for safety considerations
	Weigh items of varying weights for future reference or billing for a warehouse or delivery service

What Is the Difference Between a Static Scale and an Automatic, In-motion Checkweigher?

If you look at the weighing industry, it seems that everyone thinks building a scale is easy, and many try. The dividing line in most cases is Weights and Measures certification to ensure that approved scales are repeatable and accurate to their rating.

Since a checkweigher is not a static scale, the Weights and Measures regulations for static scales do not apply. For this reason it may be difficult to discern a good or appropriate checkweigher. Without strict regulations on accuracy, companies are free to claim what ever accuracy they want, and test them in such a way that they achieve the desired results.

Some companies that do not have true checkweighers or are trying to cut costs will use a static base, an averaging indicator with a fast update rate, a photo-eye and a conveyor. However, most static bases are not designed for in-motion weighing. The constant vibration and dynamic

loading of a package coming onto the scale causes the cell to oscillate in violent ways. This movement can cause inaccurate weighing or a damaged cell.

Checkweighers must also obtain accurate weight readings within a fraction of a second. Traditionally used static scales do not need to react as quickly and have much longer settling times (up to several seconds). Averaging indicators cannot handle the dynamic effects of weighing items in motion.

Although few regulations exist for most checkweigher applications, NIST has adopted tentative code for automatic weighing devices in NIST *Handbook 44*. However, because checkweigher manufacturers are not bound to design, manufacture, and maintain systems to this code, it is important to carefully research checkweigher manufacturers. Chapter 4 provides more information on how to research checkweigher manufacturers.

2 Package Weight Control

Introduction

The legal standards require the average weight of packages comprising a lot to be equal to or greater than the label weight, and that no single package weigh unreasonably less than or greater than the label weight.

To meet these legal requirements as well as to maintain an efficient packaging operation, the checkweigher operator and supervisor must understand the principles of checkweighing and statistical package weight control. Applying this knowledge enables companies to reduce under and overweight problems.

Statistical Analysis of Data: A Production Statistics Primer

Filling a product in production is subject to several hundred random events, such as wind currents, voltage spikes, humidity, changing product density, and effects of mechanical devices involved in the filling process.

Due to these random events, the same fill weight cannot be achieved every time. Each weight will vary slightly from one package to another, and as long as events affecting the filling are truly random and equally likely to happen, the weights will follow the laws of **Standard Distribution** also referred to as the **Normal Distribution** (Figure 0-1).

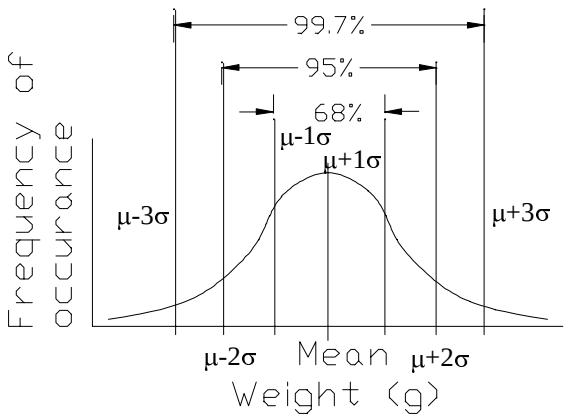

Figure 0-1: Normal Distribution

To define and understand a normal distribution, there are two terms in statistics you must know, the average or **Mean** and **Standard Deviation**, denoted μ (pronounced Mu) and σ (pronounced sigma) respectively. Figure 0-2 shows two different bell curves with the same mean value.

Example:
The mean is the sum of all values divided by the number of values. Consider 5 bags with the following weights in kilograms:
2, 8, 10, 20, 25
The mean weight is

The **Mean**, or average, is the sum of all values divided by the number of values. The Mean simply states that if the total weight in the sample (65 kg) was evenly divided across all bags in the sample (5) , each bag would weigh 13 kg. The mean package weight compares to the target weight, which is usually slightly above the labeled weight of the package.

If the mean is at or above the target weight, then the company is producing legal product, right? Not necessarily, because the mean by itself is not very useful.

Suppose the labeled weight on a bag is 10 kg and the target weight is 11 kg. According to a mean of 13 kg, production is above the target and legal requirement, but looking at the individual weights might show us that 2 bags are grossly underweight, 1 is correct and 2 are grossly overweight.

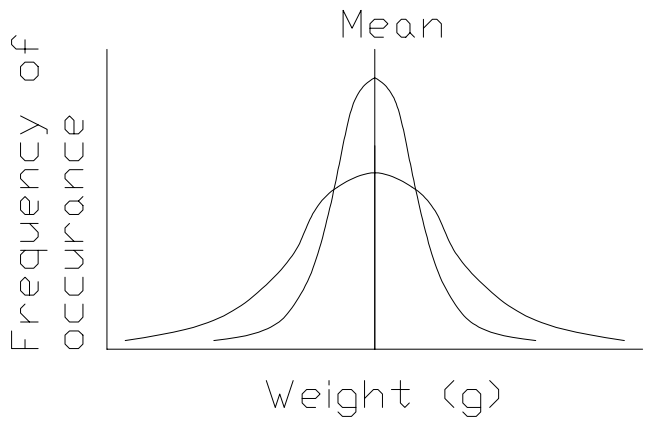

Figure 0-2: Two Different Normal Distributions

Definition: Standard deviation is the spread of data around the mean of a normally

Example:
If there is a new filler with the following sample weights:
13, 12, 14, 12, 14
The new mean is still 13 kg, but the standard deviation is now only 1 kg. By Figure 1 above, 68% of the bags will fall between 12 and 14 kg, 95% will fall between 11 and 15 kg.

We need a way of telling how far each bag weight is from the mean, or in other words, what is the spread of the data. **Standard Deviation** describes the spread of the data from the mean of a normally distributed population. In Figure 0-2, the two different curves have the same mean, but different standard deviations. The wider curve has a greater standard deviation than the narrower curve.

Look at the lines on either side of the mean in Figure 0-1, labeled $\mu + 1\sigma$ and $\mu - 1\sigma$. We understand the lines represent boundaries between which 68% of all data fall between the mean minus one Standard deviation and the

mean plus one standard deviation. These lines will move as the Standard Deviation changes, but the percentages between them remain constant.

Returning to our bag example above, the standard deviation is 9.3 kg and the mean is 13 kg. Substituting into the definition in Figure 0-1, we know that 68% of all bags fall between 3.2 kg and 22.8 kg. Not very good, and that's only 68% of the bags!

What if we wanted to know the range of 95% of the bags? Using the definition, we can be sure that 95% of the weights will be between -5.6 kg to 31.6 Kg. This curve would be best represented by the lower curve in Figure 0-2.

What if there was a new filler and the new mean is still 13 kg, but the standard deviation is now 1 kg. 95% of these packages will weigh between 11 and 15 kg, a much "tighter" range. This normal curve would be represented best by the taller curve in Figure 0-2.

In production, the standard deviation of the product weight is largely determined by the characteristics of the filler. One goal of checkweighing and SQC is to determine the mean and standard deviation values, so that the filling process can be controlled by raising the mean such that the required percentage of the bell curve (the shape of which is determined by the standard deviation) is above the legal limit.

Defining Accuracy

The two most important factors measuring the success of a checkweigher are its linearity and repeatability, which comprise the accuracy of a scale.

Note: Checkweigher linearity differs from load cell linearity. The checkweigher linearity refers to a statistical term which

Linearity refers to how close to the actual weight of a package a checkweigher measures each time a test package is weighed on the scale. The difference between the actual weight and the indicated weight is called the error. The less error, the better the linearity of the system. Mean error describes the average difference between the indicated and actual weight of a package. There is a difference between the way we use linearity and the actual linearity of a load cell

Repeatability of a system is measured with standard deviation. Checkweigher standard deviation describes the

weight variance calculated from weighing a specific mass several times. The lower the standard deviation, the better the repeatability, or precision, of the checkweigher.

Figure 0-3 compares a scale to a target. Each hit symbolizes one weighing of a particular item. Imagine you are testing four checkweighers by weighing an item 5 times on each. In the diagram below, the center of the target symbolizes the static weight of the item measured on a calibrated static scale. The first checkweigher is neither repeatable nor linear, and the weights are scattered.

The second checkweigher is linear, but not repeatable. Weights are centered around the static weight, but vary greatly from each other as in the second target.

The third checkweigher is repeatable but not linear. All the weights are very close together, but offset from the static weight. The fourth checkweigher is linear and repeatable. As shown in the fourth target, the weights are all very close to the same and centered around the bulls-eye, or static weight.

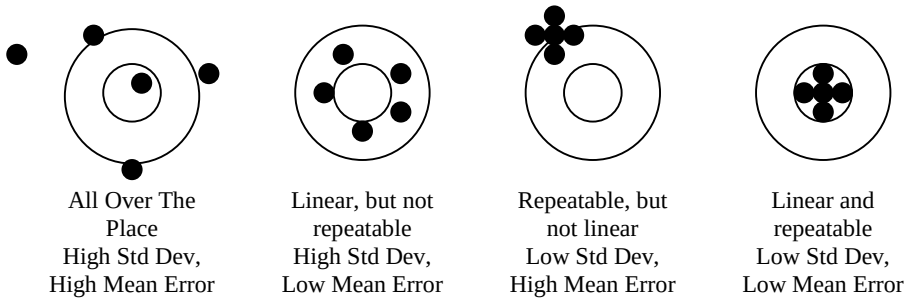

Figure 0-3: Accuracy as Shots at a Target

Checkweigher Accuracy

When manufacturers talk about checkweigher accuracy, they are usually talking about repeatability, not linearity. Checkweighers can easily avoid or compensate for linear error. How do we determine checkweigher accuracy?

The checkweigher control compares each item weight to preset zone limits. At each preset zone limit or "set point," it would be ideal if the machine could precisely separate items above the zone limit from items whose weights fall below the zone limit.

Unfortunately, this cannot be achieved due to various machine and environmental factors which will be described later. Instead there is a small weight zone above and below the zone limit where a package may be classified either over-limit or under-limit. This zone of uncertainty is described by Figure 0-4.

The accuracy of the checkweigher is critical at the weight zone limits. Consider an item weighing 110 g that is passed over the checkweigher described above in Figure 0-4. The magnifying glass shows a view of the checkweigher's normal distribution curve for a 110 g item. The graph shows that 95% of the time a 110 g item will be classified between 109.8 and 110.2 g by the checkweigher. The zone of uncertainty is ± 0.2 g 95% of the time (at 2 standard deviations). 99.7% of the time, the items will measured between 109.7 and 110.3 g. The uncertainty, or accuracy, is that at 110.0 g, it is as likely the item will be classified in Zone 2 as in Zone 3.

Checkweigher accuracy: The sum of the standard deviation and the mean error of the weighments of a single item run across the scale many times.

Checkweigher accuracy is defined as the standard deviation of the weighments of a single item weighed on the checkweigher several times. It is the variability, or uncertainty, of the checkweigher.

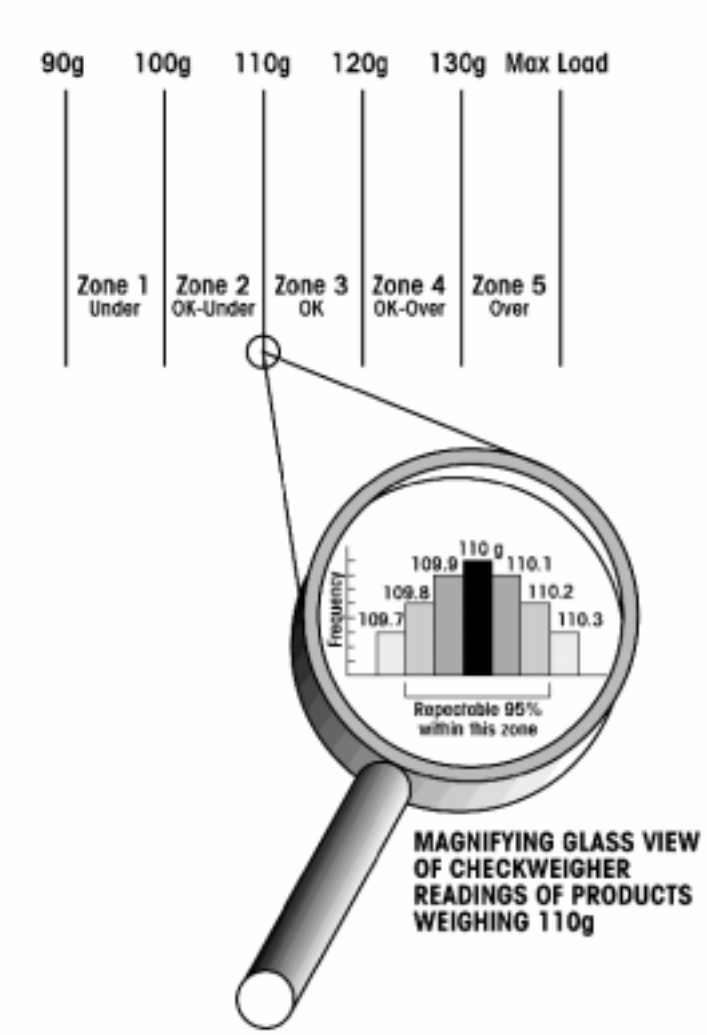

Figure 0-4: A Close-up View of Checkweigher Accuracy

The checkweigher measurements will vary a small amount with the repeated measurement of a single weight. The checkweigher variation is independent of the variation of the actual weight, from one item to the next. For example, in Figure 0-4, the checkweigher variance is depicted as a frequency histogram of measurements of a 110 gram item. The actual weight may vary acceptably from 100 to 130 grams, but the checkweigher measurements will vary only up to about 0.6 grams for any given item.

“the term “accuracy” is actually a measure of

the uncertainty of the checkweigher."

Unlike a static scale, there are many dynamic forces dependent on several variables acting on the scale and package on a checkweigher. Due to these forces, checkweigher accuracy does not equal the achievable accuracy of high precision balances. Think about the environment around a checkweigher. Packages are continuously moving on and off the scale, as fast as several hundred per minute.

Think about weighing yourself on a bathroom scale at home. Step on the scale, let the scale settle, and read the weight. Now run around the room and cross the scale while moving. Do you expect the weight readings to vary? Of course.

Checkweigher weigh cells have very short settle times, but because the package never stops moving, the scale never fully settles at one weight reading. Most manufacturers offer products with a range of accuracies to fit your needs.

"Accuracy comes at a price."

Accuracy comes at a price, however. To get a checkweigher with better accuracy, you may compromise on the sturdiness of the machine or flexibility of machine application. A higher accuracy system may cost more money up front, but will save much more in the long run by reducing product giveaway, scrap, and rework costs. A checkweigher with lower accuracy may cost more in the long run.

Testing Checkweigher Accuracy

Example:
If a checkweigher has 1 gram accuracy at 2 sigma and a 500 gram package is passed over the scale several times, 95% of the time the checkweigher will show a weight between 499 and 501 grams for that test item.
If the checkweigher indicated weights from 498 to 500 grams 95% of the time for the same 500 gram sample, and the average reading is 499

The easiest way to test the accuracy of a checkweigher is to weigh a representative item on an accurate scale, and then weigh the package on the checkweigher a number of times and record the indicated weights. Using this data, calculate the average and standard deviation. Checkweigher accuracy can be defined at ± 1, 2, or 3 standard deviations (sigma) from the mean. In this book, we will refer to accuracy at 2 standard deviations from the mean. Table 2 expresses the same checkweigher accuracy

with six different statements, referenced at ±1, 2, or 3 standard deviations.

Mean error simply equals the absolute value of the difference between the actual weight of a item and the average weight calculated by the checkweigher.

Table 2: Equivalent Accuracy Statements for a Checkweigher with σ = 0.5 g*

Table 2: Accuracy Statements for a Checkweigher with σ = 0.5g*		
Depiction	**Statement 1**	**Statement 2**
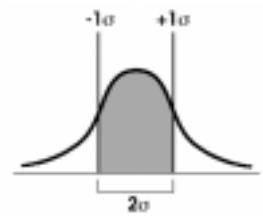	± 0.5 g at ±1σ	1.0 g at 2σ
	± 1.0g at ±2σ	2g at 4σ
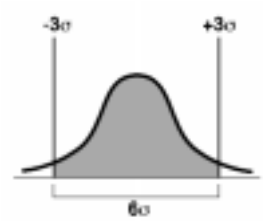	±1.5g at ±3σ	3g at 6σ

* All statements above are equivalent; they describe the accuracy of a checkweigher with a standard deviation of 0.5g

Weights and Measures Guidelines

Example:
A scale with a resolution of 10,000 divisions can weigh a 500g package to increments of 0.05g, with a maximum allowable inaccuracy of ± 0.125g. A scale with a 1000 division capacity can indicate the same 500g package to only 0.5g

Weights and Measures guidelines are based on the **resolution** of the scale, or the number of divisions it can discern, defined as "the smallest increment of weight change that can be displayed by the indicator." There is no correlation between resolution and accuracy on a dynamic checkweigher.

"The results obtained from several weighings of the same load under reasonably static conditions shall agree within the absolute value of the maintenance tolerance for that load, and shall be within applicable tolerances (NIST, *Handbook 44*)." Tolerance is measured in divisions on a scale.

NIST has a proposal to legislate checkweigher accuracy classifications based on the package weight and rate. The

proposed legislation is in effect in Europe as defined by The Organisation Internationale de Metrologie Legale (OIML). You can obtain a copy of *OIML R 51* by contacting The National Institute of Standards at the address listed previously.

What Affects Checkweigher Accuracy?

Several conditions can affect the accuracy of any manufacturer's checkweigher. There are ways to compensate for or eliminate these problems in your factory. When you consider buying a checkweigher, think about the attributes at your facility and in your product which can affect your checkweigher's accuracy.

The Environment

Common to all scales is the effect of environment on accuracy. Some checkweigher systems are better equipped to handle extreme environmental attributes than others. illustrates some of the **Environmental Hazards** to checkweigher accuracy.

Some load cells are not equipped to handle **temperature fluctuations**. If the strain gauges on the load cell are not sealed against moisture and outside contaminants, excessive temperatures and moisture can destroy the integrity of the load cell.

Debris and **dust** falling on and around the scale can offset the tare setting on the checkweigher. If debris continually builds on conveyors or platforms, then the scale will need to continually re-zero. It would be more effective to shield the scale section from foreign mass or to keep a reasonably clean production area around the checkweigher.

Any **vibration** introduces "noise," or unwanted signals to the scale. The cause could be a hopper, a nearby press, or even another conveyor in contact with the checkweigher. Many checkweighers can automatically filter out some extraneous noise. However, for optimal performance, a checkweigher should be isolated from extraneous vibration.

Air currents, like debris, can also affect checkweigher indications. It is especially important to avoid drafts around highly sensitive checkweighers like those

commonly used in the pharmaceuticals industry. Even if air movement is kept at a minimum, a draft shield may still be helpful. If you have a highly sensitive scale, try passing your hand over it without touching the scale platform. You may notice a weight fluctuation. The same will happen on a high-Figure 0-5resolution checkweigher.

Electrical noise such as electro-static discharge and radio frequency interference (RFI) can ruin checkweigher indications. RFI can be caused by pagers, cell phones, and "walkie-talkies," as well as by other machines. The build-up of static on a scale will result in apparent weight build-up very quickly, and cannot be filtered from the scale readings. The static buildup can be caused by the machinery or items crossing the scale. Even a draft shield or guard can cause static build-up.

A **caustic environment** can degrade a load cell and other scale components. Consider your product and the cleaning procedures in your plant.

Figure 0-5: Environmental Effects on Accuracy

Checkweighers are available in many materials. Stainless steel components will stand up to harsh environments or frequent contact with water. Other materials can be coated with a resistant paint, but these will not stand up to harsh or washdown environments.

Some load cells are made of aluminum. These work well and cost less than stainless steel load cells, but they are not designed to handle contact with water or other corrosives. They should not be used in potentially corrosive environments, even if only occasionally washed down.

One of the most common causes of poor accuracy is **abuse**. Any employees working with and around checkweighers can unknowingly harm the checkweigher. Common examples include: stepping on a weigh platform, placing too much torque on a load cell by tightening a bolt, or twisting a weigh belt, and improperly cleaning the checkweigher.

Tips to protect your checkweigher from its surroundings

- Buy a load cell with well-sealed strain gauges
- Keep a clean work area, or shield the scale from falling debris
- No other mechanical systems should be in physical contact with a checkweigher
- Bolt checkweigher firmly to sound ground
- Isolate checkweigher from other machinery with heavy vibrations
- Isolate checkweigher from wind or air current, or shield scale if necessary
- Ground all shields and components touching the scale
- De-ionize product if necessary
- Shield checkweigher from radio-wave interference
- Protect lines from voltage spikes
- Choose the construction that will wear well under the conditions of your plant
- Use a load cell that is suitable for the environment
- Train all personnel coming in contact with a checkweigher about the system, including operators, mechanics, maintenance crews, and manufacturing engineers

- Conduct routine maintenance and cleaning of checkweighers according to manufacturer's instructions

The Product

The ideal product for a checkweigher is tightly enclosed in its uniform packaging, and will not jostle, shake, or vibrate as it passes along the checkweigher. The viscosity of a liquid product can affect weight readings by the checkweigher when it **shakes** or **vibrates**.

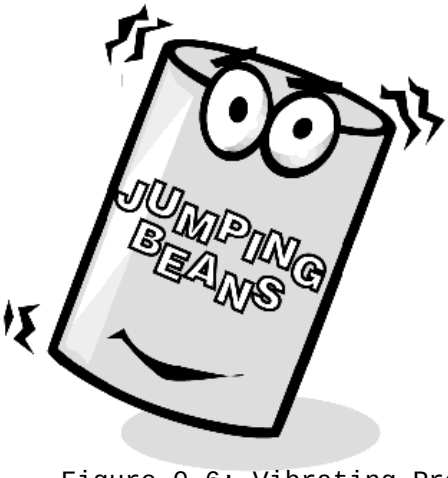

Figure 0-6: Vibrating Product

When the package passes on to the scale platform, the less stable the contents, the more time the scale will require to obtain an accurate weight reading. There are many ways to handle **product instability**.

Like other debris, **loose product** falling on the scale may inhibit accurate weight indications. Most checkweighers periodically re-zero the scale when there is a gap in the line, but usually this is not possible between every item.

The zero reading can float to account for falling product, but again, this will not catch every product spilling. For example, if open bags of flour are running across a checkweigher, the first bag may drop a pile of flour on the platform.

This pile may not clear before the next bag enters the scale. The checkweigher does not have time to re-zero the scale before that next package. Even though the second bag is underweight, the checkweigher might accept it with the additional weight on the scale.

Figure 0-7: Loose Product

A low, wide package is much more stable than a tall, thin package. Shampoo bottles are usually considered unstable due to their high height to width ratio. As a shampoo bottle crosses a scale, or transfers from one conveyor to another, it has a tendency to wobble.

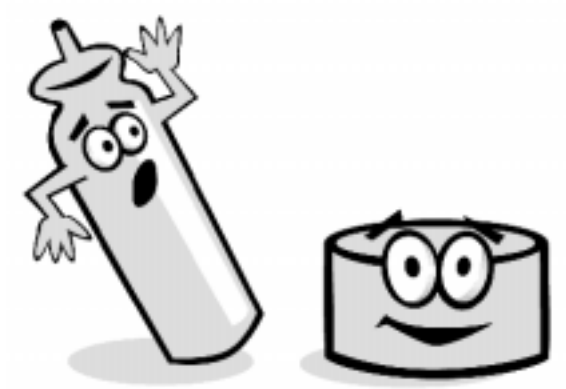

Figure 0-8: Unstable Vs. Stable Product

The wobbling of **unstable product** will affect the accuracy of the reading, because it may never fully settle on the scale. Guiderails before and after the scale can help, but they cannot touch an item once on the scale.

Like the height to width ratio, the **footprint** of the item is also very important. The more surface area touching the scale, the better. The lower the center of gravity, the more stable the package will be. Therefore, it is important to specify the footprint as well as the physical dimensions of your item to a checkweigher manufacturer.

It is easier to weigh uniform cartons and some cans than polybags whose shape and footprint may vary from item to item. It is more difficult to account for **variable shaped**

product when programming the checkweigher, and may result in a shorter weigh time.

Figure 0-9: Variable Shaped Product

On most checkweighers, a photoeye sensor indicates to the scale that an item is entering the scale. A product with a non-circular footprint that is turned from one side to another, or **shifting product** may warn the scale too soon to start recording weights, and the item may read light. Items should reach the checkweigher with the same orientation every time.

Reflective products, such as some polybags, metallic surfaces, and overwrapped cartons can confuse the photoeye. The result could be weighing late (indicating a light item), or not recording a weight at all. The problem may be solved by adjusting the angle of the photoeye or the overhead lighting.

Improper timing and spacing of items may overload the scale by placing more than one package on the scale at a time. As a general rule of thumb, items should be spaced a couple inches farther apart than the length of the scale section.

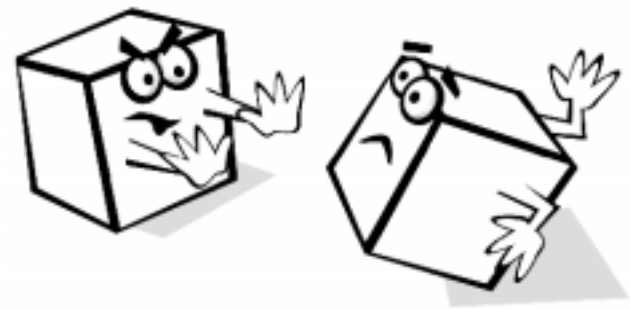

Figure 0-10: Improper Product Spacing

Universal product handling tips for checkweighers

- Guiderails before and after the scale will help maintain product stability; however, items should not be in contact with the siderails while being weighed
- Where product build-up is a concern use an automatic tare, or re-zero, and provide enough space between packages to allow the checkweigher to re-zero
- As they say, wider is better. A low, wide item is more stable than a tall, thin item
- Items with a rigid or formed product profile handle and weigh more consistently than bags or free flowing items

Checkweighing: Part of an Overall Quality System

Checkweighing is not a quality cure-all, but is an effective tool in conjunction with a well-designed quality control program. The checkweigher is only a messenger to report on processes upstream. With proper maintenance and periodic testing, your checkweighing system can ensure no off-weight or incomplete packages reach your customer or end user.

To ensure a checkweigher is running at its potential, it should be included in preventive maintenance and cleaning programs at each plant. Some checkweigher manufacturers offer a preventive maintenance contract to keep the systems in top shape.

A perfectly good checkweigher will still allow off-weight packages to continue along the line if the zone limits are set improperly. Quality personnel need to calculate acceptable weight limits, and must understand and specify the required accuracy of a checkweigher for each product and line.

> “Don’t shoot the messenger.”

Feedback, Inspection, and Tracking

The checkweigher is increasingly becoming both an input device and a feedback mechanism for overall Statistical Process Control (SPC). Checkweighers can count, calculate statistics, and send feedback automatically to other systems in the line based on the weight.

Checkweighers can be integrated with other inspection tools including open flap detectors, wrapper and cap detectors, and metal detectors. As an inspection tool, the checkweigher is a good place to document process performance for ISO, customer, agency, and internal requirements.

As mentioned before, checkweighers can present information onscreen, through an internal printer, or in an output signal for a printer or a PC-based data gathering system. The controls can integrate with a PLC and provide an interface between the checkweigher and a Supervisor Control And Data Acquisition System (SCADA).

Checkweighers today have a lot of capability for quality control and tracking. Be sure to research all the functions of your present or future checkweighers for their maximum benefit and value to your organization.

Defining Your Minimum Required Accuracy

To ensure that your checkweigher will be as efficient and useful as possible, there is a minimum accuracy required for your system to work well.

The best possible accuracy may not fit your application. Consider your product handling needs and the environment the checkweigher will run in. A “lab” quality checkweigher may not stand up well in a harsh industrial environment or food processing plant. Therefore it is necessary to consider the environment and package application as well as accuracy when buying a checkweigher.

There are two basic types of checkweigher applications, “filling” and “counting.” **Filling** refers to free-flowing or bulk-filled product. **Counting** applies to piece-weights, or looking for a specific item’s weight within a package.

Filling

In filling applications, the better the accuracy, the less product you will give away. This applies to the both the filler and the checkweigher. In filling operations you want the best checkweigher accuracy possible for your environment and application. Also important is the tare, or container, weight variance. However, it is the filler that actually controls the fill weight distribution.

The most effective way to decrease product giveaway or percent rejects is to decrease the standard deviation of the filler. A smaller variance in filling allows the target weight to be set closer to the label weight (Figure 0-11). The checkweigher accuracy comes into play only at the reject point.

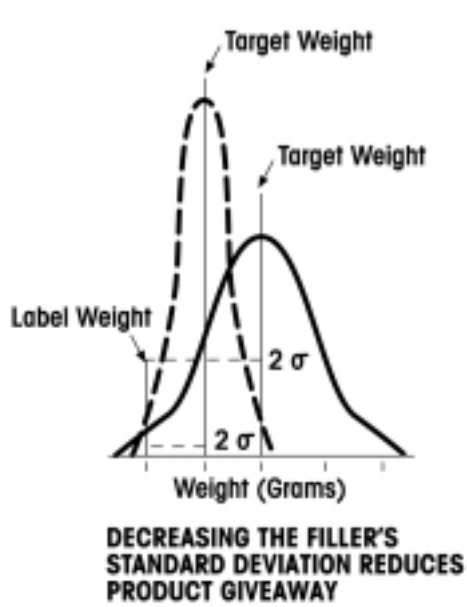

Figure 0-11: Filler Accuracy

You can reduce the standard deviation of the filler by following these guidelines:

- Use a filler suited to the product
- Maintain the filler at top condition
- Provide a uniform product flow to the filler

Counting

Acw ≤ 0.8*(Wcomp - 3*STDtotal)

Acw = accuracy of checkweigher
Wcomp = weight of smallest component
STDtotal = standard deviation of package weight (includes all

When looking for missing items or "counting" the items per package by weight, you need to calculate the standard

deviation of the package, including all its components. The standard deviation multiplied by three (3*STDtotal) must be less than the weight of the smallest component to be verified by weight. If 3*STDtotal is greater than the smallest component, you will not know by weight whether the component is actually in the package. When the total variance of the package is greater than the smallest component weight you want to verify, then a checkweigher may not help your application. A tare-gross checkweighing system may be used if the greatest variation is in the container.

Example
Minimum required accuracy to find a component by weight:
First find STDtotal; the sum standard deviation of each component, including the packaging.
3*STDtotal + Acw ≤ Wcomp.
Acw ≤ Wcomp. - 3*STDtotal
Acw ≤ 0.8*(Wcomp. - 3*STDtotal)

If the total variance of the package is less then the component weight, then the checkweigher accuracy must be less than the weight of the smallest component minus the total package weight variance, i.e. ≤ **0.8*(Wcomp. - 3*STDtotal)**, where Wcomp. is the weight of the smallest component, and STDtotal is the standard deviation of the package and all it's components. The checkweigher accuracy (Acw) can be defined at 1, 2, or 3 standard deviations with the same formula;

Acw ≤ 0.8*(Wcomp. - 3*STDtotal)

Remember, if the accuracy is calculated at 1 standard deviation, only 84% of items with weights equaling the reject point will be classified correctly. The same accuracy value at 3 standard deviations will ensure 99.7% of the same items are classified correctly.

Zone Limits

Zone limits are the weight values set by the operator or packager which establish the cut-off point between consecutive weight zones. Zone limits are a filter to allow only acceptable weight packages to continue through the flow of production. The exact setting of the zone limits depends on your own objectives and control process.

If the checkweigher accuracy is ± 1 gram, then there is a chance for a package to be either accepted or rejected within a gram of the zone limit. Therefore, the zone limits should be set at a point where there is virtually no chance for an unacceptable underweight or overweight package to be accepted by the checkweigher.

A weight zone is the interval between the zone limits. Most checkweighers have 3 or 5 zones. Some checkweighers refer to 2 or 4 zone limits, but mean the same thing. On a 3 zone, 2 zone limit checkweigher, the center zone, between the upper and lower zone limits is the range of weights which are acceptable.

On a 5 zone, 4 zone limit checkweigher, the center zone is usually the accept zone, and the weight zones on either side are “warning” weight zones to alert the operator if items are of a marginally acceptable weight. The two outside zones on a 3 or 5 zone checkweigher are for unacceptable weight items. Figure 0-12describes a 3 zone checkweigher.

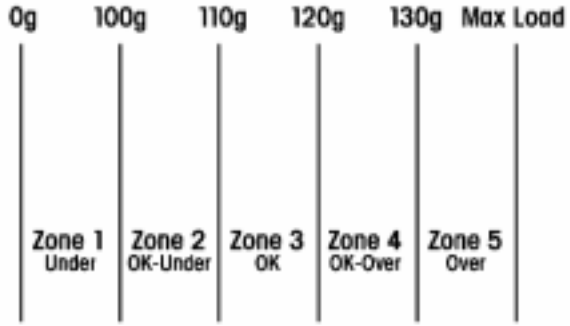

Figure 0-12: Checkweigher Zone Limits

How to Determine the Optimum Zone Limit Settings

Zone limits are based on the acceptable weight variation of the items being weighed, and to a lesser degree on the accuracy of the checkweigher. The question of setting zone limits has almost as many answers as there are applications for checkweighing. In short, it really depends on what you are looking for, and what you are trying to accomplish.

For any given checkweigher, the tighter the zone limits, the more likely acceptable items will be classified incorrectly.

Filling

1. To determine your zone limits, start with your target weight (Figure 0-13). Decide your goal for percent rejects based on your own production costs, and

calculate the target weight based on the filler variance and percent rejects.

Figure 0-13: Determine Target Weight

2. What is the maximum acceptable variation above and below your target weight (Figure 0-14). NIST identifies maximum allowable variation for items sold by net weight in NIST *Handbook 133*, "Checking the Net Contents of Packaged Goods."

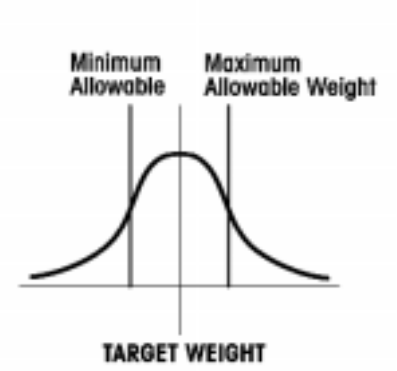

Figure 0-14: Determine Minimum and Max Allowable Weight

3. Next, tighten the acceptable weight zone by the accuracy of the checkweigher at 2 or 3 standard deviations from the maximum and minimum weight variations. Adjust the zone limits accordingly as in

Figure 0-15: Extend Max and Min values by checkweigher accuracy

Figure 0-15. The reject zones are depicted as the shaded area of the figure.

If you tighten your zone limits by two standard deviations of the checkweigher accuracy in from the maximum and minimum acceptable weights, then at least 95% of the accepted items will have been classified correctly. A more conservative adjustment of three standard deviations of the checkweigher accuracy will ensure 99.7% of the items were classified correctly.

If you are filling product and bound by net content regulations, you will set your target weight at some point above the labeled weight of your package. The checkweigher will help balance how much product you give away by rejecting underweight packages, allowing you to lower the target weight.

> "The checkweigher is only as good as the preceding processes."

However, your checkweigher may be only as good as the processes preceding it. If you have little control over the variation in the tare weight of your container, the checkweigher following the filler will provide a gross weight, not a fill weight, accurately. A tare-gross system weighs empty and then full containers, and can be used to account for container weight variation.

The same is true for any application. The greater the weight variation of individual components, the more difficult it will be to check the weight of an individual component, regardless of the accuracy of the checkweigher.

Counting or looking for missing pieces

1. If you are looking for a package count or for missing items, consider first the mean weight distribution of the lightest item.

. Compare the total (collective) mean weight distribution with the weight distribution, plus and minus the smallest item. You may not be as concerned if there are extra pieces as if a piece is missing. Set your zone limit at the

Figure 0-16: Setting the Minimum Zone Limit

points where you are comfortably certain the count is correct. Figure 0-16 shows the lower zone limit in comparison to the weight distribution curves of the target package and a package missing an item. Figure 0-17 shows what will happen if the individual piece weight is less than the total product weight variation.

2. Narrow your zones by the accuracy of your checkweigher.

As illustrated in Figure 0-16 and Figure 0-17, the lower the uncontrollable weight variation of items compared to the weight of each item, the more effectively a checkweigher will detect a missing item correctly. In Figure 0-17, the distribution, is so great that the checkweigher will reject “good” items in order to reject the items missing pieces, regardless of checkweigher accuracy. In this case, a tare-gross system may help with

Figure 0-17: Item Weight Is Less Than Product Weight Variation

high container weight variance. Otherwise, you may want to seek a solution other than checkweighing.

3 How to Choose The Right Checkweigher

In this chapter you will learn the basic application considerations, available control and feedback features, and operator and maintenence suggestions.

Application Considerations

When considering your application, it can be difficult to know exactly what checkweigher you need, and you may find it easier to let your checkweigher manufacturer make some decisions for you. Although they are experts in checkweighing, no one knows your company and your lines as you do. The more you know about applying checkweighing at your plant, the more likely you will find a solution that really fits your needs.

Four application considerations will help you define your basic checkweighing needs: system environment, required accuracy, line rate, and package specifications. These areas define the checkweigher as an isolated system. Soon we will consider checkweigher integration with other processes.

Environment

We have already discussed the environmental attributes which potentially affect checkweigher accuracy and life. Now consider how these attributes determine the environmental requirements of your checkweigher.

Temperature

Your application may be in a refrigerated or heated area. You might be weighing frozen, refrigerated, or heated items. The ambient temperature may vary 10 or more degrees during the day.

Temperature may affect some of the other systems in your process routinely. In most checkweigher applications, temperature will not be an issue, but if there are major fluctuations or extremes, it is best to make this clear to your equipment supplier.

Temperature fluctuations or extreme temperatures can cause condensation. In such cases it is necessary to use insulate and seal controls, junction boxes, motors, and load cells against condensation inside the enclosures. Extreme heat or cold may call for special belt materials as well.

Moisture

If there is moisture or excessive condensation on and around the items to be weighed, or if surfaces will be washed down with water, you will need a water-tight washdown machine. Remember that mild steel and aluminum will corrode eventually in a wet environment even if covered with a water-resistant paint or coating.

If moisture collects only at the product area, then stainless steel and water-safe components around the product area may be sufficient.

Caustic product or environment

If your products or washdown sprays contain corrosives, such as cleaning chemicals, sugars, or salt, you will need a checkweigher that can hold up under harsh washdown conditions.

USDA washdown requirements

Checkweighers are available already approved for USDA Meat and Poultry and USDA Dairy washdown applications. USDA officials may approve other checkweighers once installed in your plant. Ask about approval when speaking with a checkweigher manufacturer.

NEMA Environment Standards

The National Electrical Manufacturers Association (NEMA) established standards for industrial controls and systems. These standards classify systems by their ability to keep particles and moisture out of an enclosure or connector. Use these terms to describe you needs for checkweigher controls and enclosures.

- NEMA/UL Type 12 enclosures are rated as dust-tight and drip-tight. They protect the enclosed equipment from fibers, flyings, lint, dust, dirt, light splashing, seepage, dripping, and external condensation of non-corrosive liquids. Similar to IP 54.

Hint: Enclosures provide little protection if they are left open or unfastened. Always keep electrical enclosures closed unless the

- NEMA/UL Type 4 enclosures are water-tight and dust-tight and intended for use indoors or outdoors to protect the enclosed equipment against splashing water,

seepage of water, falling of hose-directed water, and severe external condensation. Similar to IP 65.

- NEMA/UL Type 4X enclosures are water-tight, dust-tight, and corrosion resistant. They have the same requirements as NEMA 4 enclosures with the addition of the corrosion resistant feature. Similar to IP 66.

Note that the enclosures provide little protection if they are left open or unfastened. Always keep electrical enclosures closed unless the internal components are being serviced.

Hazardous environments (Class I/ II, A/ B)

A hazardous classified area is any space inside or outdoors that has explosive gas, vapor, dust, or flyings mixed with air in ignitable concentrations. Any industry can have hazardous classified areas. An organization must adhere to certain requirements depending on the classification of hazard to prevent a fire or explosion.

There are several methods of protection. The most basic is to keep all equipment which could cause a fire or explosion out of the classified area. Other methods include using only intrinsically safe equipment, NEMA 7/9 rated explosion-proof enclosures, or purge systems. Purging an enclosure consists of maintaining positive-pressure air flow through an enclosure to keep out any hazardous (flammable) substances from the environment. It is extremely important to eliminate or reduce sparks and static electricity. Refer to Table 3-1 for a description of hazard classes.

Table 3-1. Hazardous Area Classifications

Nomination		Description
Class I		Flammable gases or vapors, Groups A, B, C, D
Class II		Combustible Dusts, Groups E, F, G
Class III		Ignitable fibers and flyings
Division I		Class I, II, or III normally present
Division II		Class I, II, or III present on a failure
Unclassified		Hazardous properties enough away from a classified area to be determined safe

See the National Electric Code Book (N.E.C.) Article 500 for a more detailed explanation of hazard classes.

If you will be running a checkweigher in a classified area, you will need to protect the environment with at least one of the above methods. Explosion-proof checkweighers and components are available.

Ambient vibrations and air movement

You and your checkweigher manufacturer may decide that isolated scales, special dampers, or draft shields are necessary for some of your applications. The draft shield is useful in high precision applications, but may not add value to lower required accuracy systems or reasonably still environments.

Accuracy

Various scale technologies provide a range of accuracy. Each manufacturer designs their weigh sections a bit differently, from the type of scale or weigh cell, to how they process the signal. You can define for your manufacturer the accuracy you require without knowing the ins and outs of their technology.

There is most likely a checkweigher which can meet your accuracy needs. The highest precision checkweighers may be limited by item size, weight, rate, and the system environment.

Characteristics largely inherent to dynamic properties of items and product handling link accuracy to speed. Up to a point, accuracy increases as conveyor speeds and line rates decrease. The more stable the item is during weighing, the better the accuracy. Transport chains are usually more accurate than belts, as long as they can handle the product well.

The Weigh Cell

There are many scale technologies, but the two most common weigh cells are the load cell and cells using the principle of force restoration.

Load Cell (0-1)

The strain gage load cell has two major components: flexures on a load bearing surface and a strain sensor. Often the load cell also has an overload protection to protect the cell if a load breaches the scale capacity.

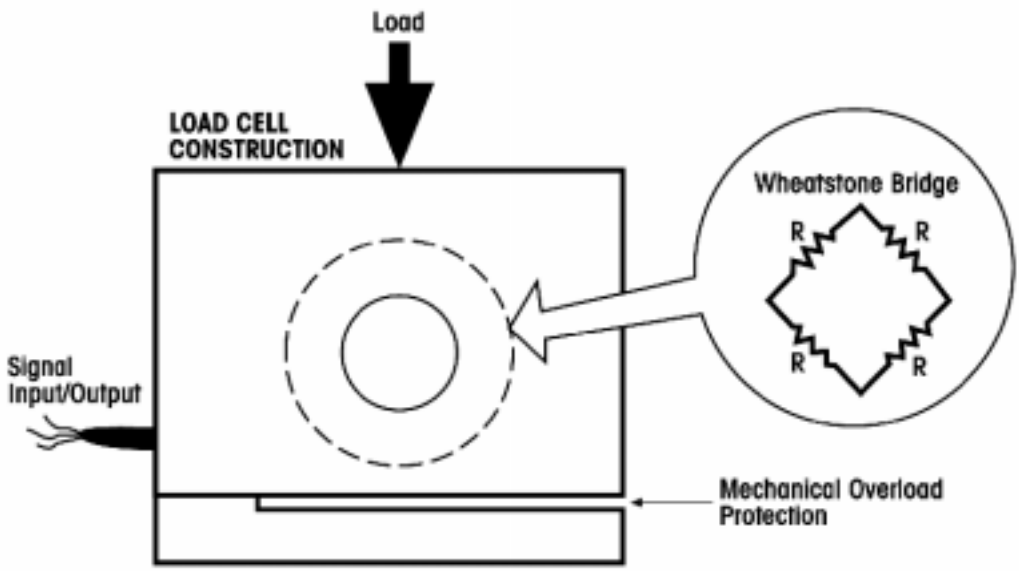

Figure 0-1: Load Cell

The strain gage load cell measures the strain (Figure 0-2), or proportional displacement of sensors within the load cell resulting from a load on the weigh platform. The strain is measured as a small voltage output. The output varies linearly along the weight capacity of the load cell. The control translates the voltage to a meaningful weight based on the system calibration.

How does the load cell measure strain? A strain gage is a thin film resistor whose resistance changes as the film flexes under load. A load cell contains four strain gages and fixed resistors connected as a Wheatstone Bridge. The load cell passes a small current across the gages. When the load cell is balanced, each of the gages has the same resistance).

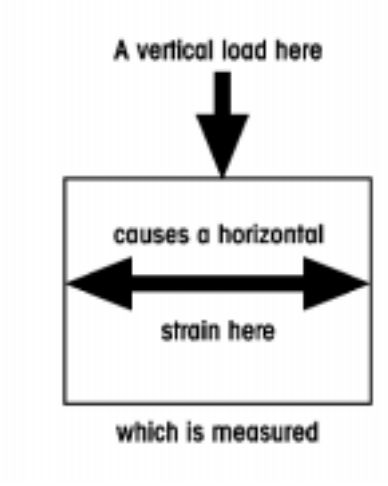

Figure 0-2: Strain Diagram

However, when there is a force applied to the load cell, the resistance displaces unevenly across the bridge, creating a

Figure 0-3: Balanced Load Cell

Figure 0-4: Load Cell With a Weight On It

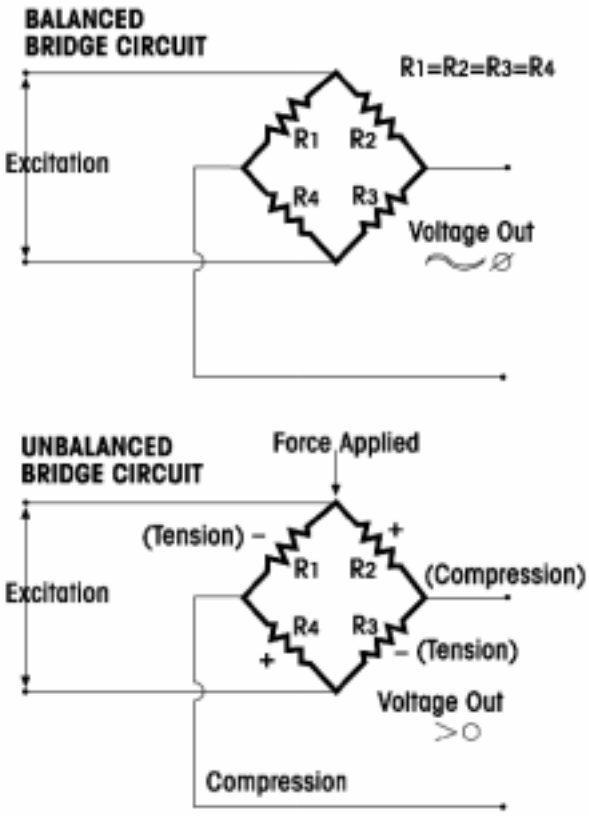

change in the voltage output (). Since the changes occur linearly along the capacity of the load cell, the voltage change can be readily converted to a weight output.

Magnetic Force Restoration (Figure 0-5)

Magnetic Force Restoration is another type of weigh cell. A rod within the weigh cell deflects when a load applied (Figure 0-5). The rod rests within an electro-magnetic field. When the rod is displaced, a sensor tells the weigh cell to apply a force to restore the rod to its resting position. The weigh cell increases the current through a coil of wire.

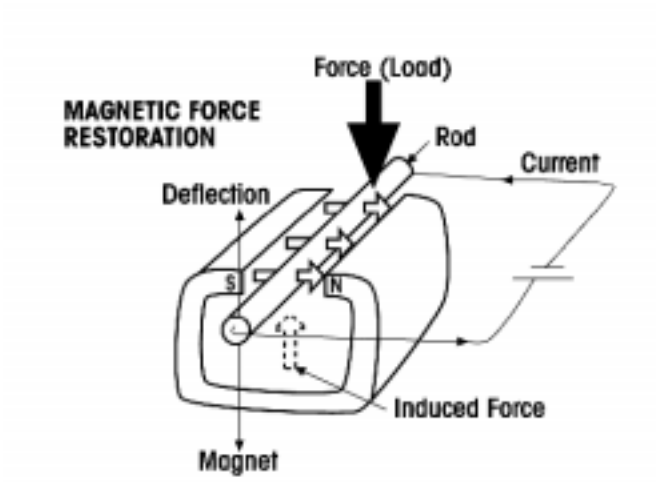

Figure 0-5: Magnetic Force Restoration Cell

When the current is increased, an upward force is generated within the magnetic field according to the electrodynamic "right hand rule." The weigh cell increases the current through the wire until the upward force matches the load and the rod is realigned. The force restoration weigh cell measures the increased current and converts it to a weight.

These weigh cells can be highly accurate and fast when compared with a load cell. However, load cells can be much more rugged for moderate to heavy-duty industrial applications.

Rate

Checkweighers can run at rates from one to several hundred items per minute. The longer the item (in the direction of flow), the faster the conveyor must move to maintain the same item rate.

For example, a 6 inch long item might be weighed at 60 pieces per minute (ppm), traveling along a conveyor at 60 feet per minute (fpm). An 18 inch long item might have to move at 120 fpm to match the 60 ppm line rate.

Rate is usually inversely proportional to accuracy. You may have to compromise somewhat between accuracy and rate. In order to maintain a high throughput and accuracy you can divide a line over multiple checkweighers. Dividing a line will reduce the rate over each checkweigher, while maintaining a constant throughput for the system.

Conveyor speed is inversely proportional to accuracy. Manufacturers can optimize line rates and minimize belt speeds with shorter weigh sections over the scale.

Package

> “90% of checkweighing is package handling”

Some checkweighers are designed precisely for certain types of items, or packages; some are systems are designed specifically for cans, bags, cartons, cases, heavy items, light items, rounded bottles, and so on. Some are built for unstable products which could be top-heavy, have a small footprint on the conveyor, or have a high height-to-width ratio.

Packages with consistent footprints, like cans or cartons, run well over chains, while bags and malleable items often run better on belts. Guiderails can direct and stabilize items which are taller than they are wide. Some small or unstable items require timing worms, also called timing screws, to space products before reaching the scale section.

O-ring and strip belts reduce friction and motor load. O-rings and strip belts also reduce the effect of adhesion, where water holds a belt to its platform and acts as friction. Friction and overloading is caused by the downward force of the item on the belt by reducing the contact surface area.

Transfers

Checkweighers are also available with small diameter pulleys for smoother transfers of small or unstable items. When the feeding and take-away conveyors on either side of the checkweigher have large diameter pulleys, requiring a gap between conveyors, several transfer aids can guide product onto the checkweigher.

Side transport belts can transfer unstable products between conveyors. Some side transport belts even weigh items and are checkweighers themselves. Dead plates are used to aid transfer on and off checkweighers as well as between belts on the checkweigher. Powered and gravity rollers can also aid transfer of items onto and off of the checkweigher.

Package spacing

Hint: Package timing and spacing is a critical portion of package handling and checkweighing!

Pitch: the distance

In order to weigh properly, checkweighers require that only one item be on the scale section at a time. If there is not enough spacing between items, errors will occur in weighing. In order to create or maintain an appropriate **pitch**, spacing belts speed up the velocity of the item from the approaching conveyor and create a larger gap between items, as shown in Figure 0-7.

If items are randomly approaching the checkweigher without any consistent spacing, as shown in Figure 0-6, it may be necessary to also time packages. A timing conveyor creates a uniform spacing between items. Typically the timing conveyor will slow the packages to create butt-to-butt spacing (where the pitch equals the length of the item). Timing prepares items for the spacing conveyor. You can apply the Golden Rule of spacing to determine your spacing, conveyor speed, and line rate;

The Golden Rule: Conveyor Speed = Packages Per Minute* Pitch.

If a timing section is not used when there is random item spacing as at the infeed of Figure 0-6, the spacing and scale sections must run at a higher velocity to create the correct gap for the worst case scenario (butt-to-butt items). By running faster than a checkweigher with a timing section, the checkweigher will wear more quickly, and accuracy may be sacrificed in exchange for speed.

Some packages are unable to be timed consistently. Packages must be rigid and not suspect to shingling. Since bags do not have rigid sides, they will squeeze together when slowed down. Flaps extending in the direction of flow will cause shingling of items when they come butt-to-butt. Shingling can cause worse package handling problems downstream.

If your checkweigher will be directly downstream from a bagger, case-packer, or filler, the items are most likely timed, and may be spaced properly. There may even be a checkweigher that was specifically designed for smooth integration with the machine upstream. Check with your equipment supplier.

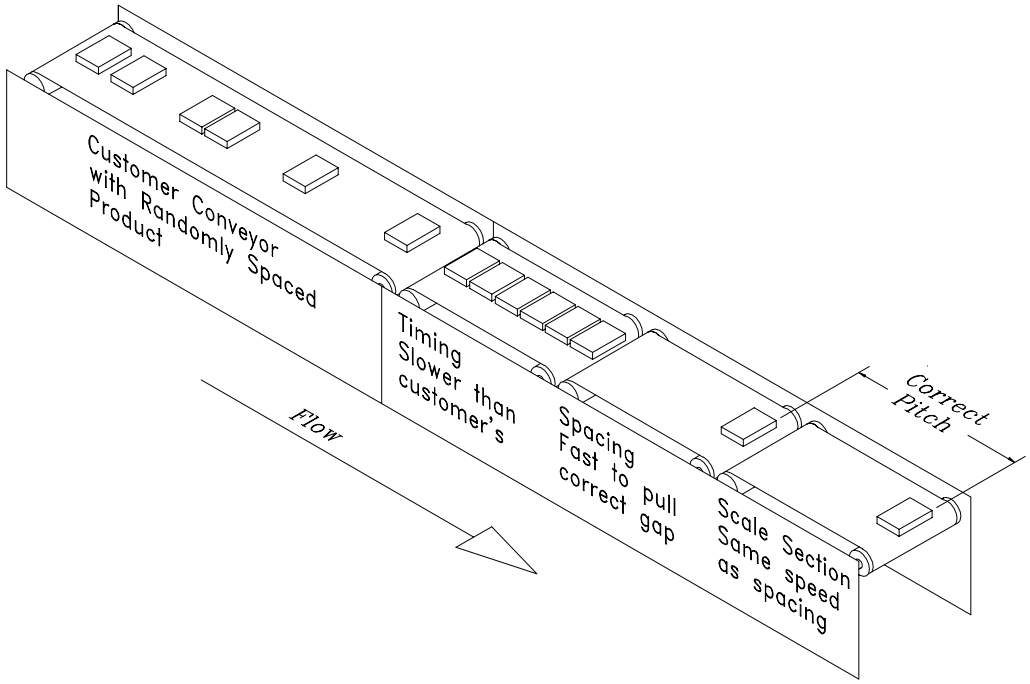

Figure 0-6: Package Timing and Spacing

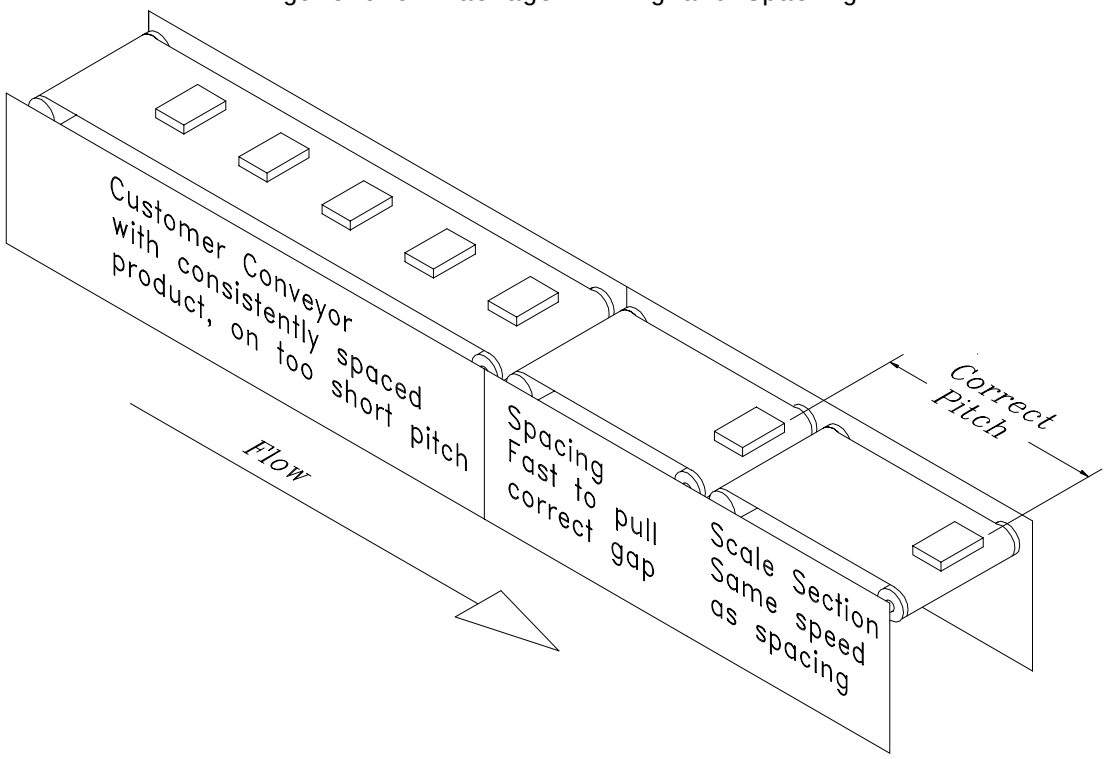

Figure 0-7: Package Spacing

Rejecting Items

A reject signal is sent from the checkweigher control to a rejector on the checkweigher or further downstream. Typically the reject signal consists of a solid state relay with high or low voltage output or a mechanical contact.

You can purchase a rejector with your checkweigher or provide your own. Timers are set so the correct item will be rejected after defined as offweight.

Checkweighers can also accept reject signals from other flaw detection devices like metal detectors, flap detectors, or cap detectors, and reject those flawed items from the line. Several methods are used to reject items.

A simple air blast is ideal for lighter packages around 500 grams or less, when the item is self-contained (). If product is fragile or in an open container, than a softer reject is recommended. An air blast rejector consists of an air hose which forces air through a nozzle at high pressure. The resultant air blast blows items off the discharge conveyor.

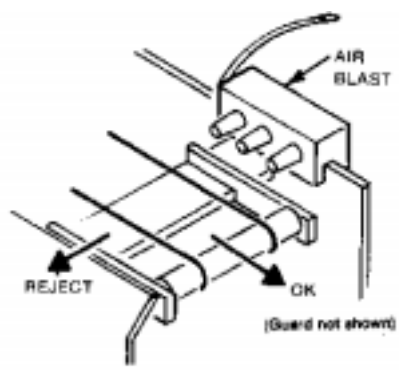

Figure 0-8: Air Blast Rejector

Pneumatic rejectors will require a clean source of air; small filters are available which can clean air just before the rejector. Some may still require you to provide clean shop air.

Push-off rejectors (Figure 0-9) can be used over a wide package size and weight range. Push-off rejectors consist of~~constructed with~~ an air cylinder and with a plate mounted to the cylinder shaft. When an item is to be rejected, the air cylinder is activated, and the plate pushes the item out of production flow.

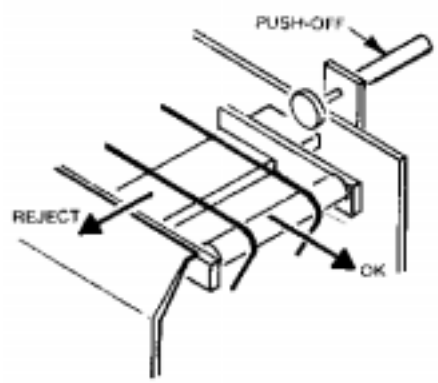

Figure 0-9: Push-Off Rejector

~~piston~~Plow and sweep type rejectors (Figure 0-10) can reject products more gently than an air-blast or some push-off rejectors, and can be used with open containers or items which will be reclaimed. Plow and sweep-off rejectors are like a push-off rejector, but use a paddle on a pivot point to "sweep" items from the production flow.

Rotary tables off the rejector collect items in an upright position for later collection. They are turntables just opposite the reject station.

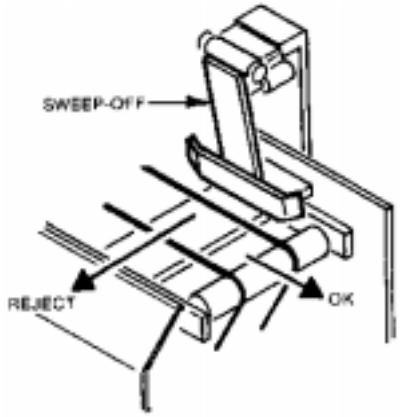

Figure 0-10: Sweep-Off Rejector

Gates can divert and guide product between two lanes. Gates can be used as a soft reject or classifying tool. They are usually activated pneumatically. Center gates (Figure 0-11) pivot about a vertical plane and direct items to the left or right.

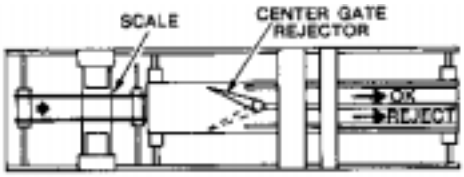

Figure 0-11: Gate Rejector

Parallel gates (Figure 0-12: Parallel Gate Rejector) are more sophisticated and provide a softer reject than a single gate. They are ideal for open or unstable containers, because they guide items once they are within the gates in a smooth manner. Gates should be used over low friction belts which permit items to slide to the side easily.

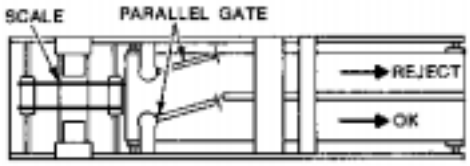

Figure 0-12: Parallel Gate Rejector

Line dividers (Figure 0-13) can divert items into two or more lanes and are used to reject, classify, divert, or converge items. As a rejector, they are used with unstable and unpackaged items like open bottles or meat and poultry for extremely soft rejects. Shallow sliders, or plates, carry the product to the appropriate lanes.

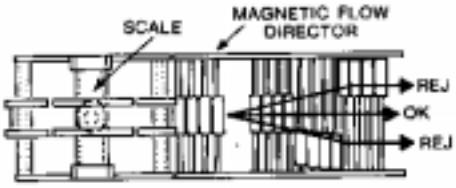

Figure 0-13: Line Divider Rejector

Line Dividers can be used to divert product to multiple lanes, like for over weight, underweight, and correct-weight items. Line dividers can also be used to divert odd-shaped items which are otherwise difficult to reject.

Drop-through rejectors (Figure 0-14) are conveyors which mechanically slant down or up to reject items. They are useful for items which are difficult to direct away from the direction of motion. There are limitations on item height and rate for drop-through conveyors.

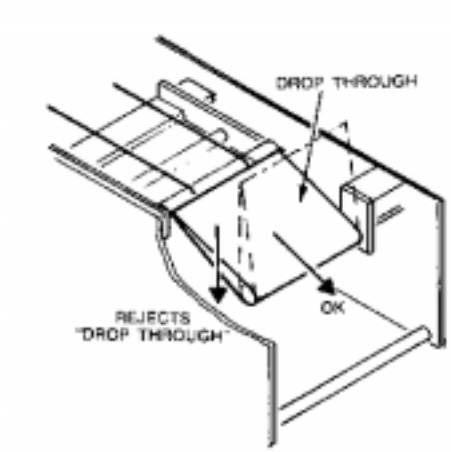

Figure 0-14: Drop-Though Rejector

Some checkweighers, especially those used to weigh large cases, will send the signal to stop a conveyor and sound an alarm when they find an off-weight package. Stopping the conveyor is practical at low item rates and when few rejects are expected, as they require manual response by an operator to continue the line.

Checkweighers can sound an alarm or stop after a preset number of consecutive items are rejected.

The Control: Information and Policing

Policeman

The so-called policeman is the traditional checking and rejecting portion of the checkweigher. The checkweigher is meant to save you money and protect your customers. Many Fortune 500 companies say their number one complaint is underfilled product.

> “Save money and protect your customers.”

The checkweigher weighs items and the control classifies the weight into one of typically 3 to 5 zones. The control then sends a signal to a rejecting mechanism. The control

has a timer which can be set based on the location of the rejecting mechanism.

> "Many Fortune 500 companies say their number-one customer complaint is underfilled product."

The traditional checkweighing policeman can use audible alarms or alarm outputs when rejecting product. Other alarms can sound when the mean varies from the target weight a certain amount, when there is a jam or back-up downstream, when the scale needs to rezero, when items do not clear the scale, when an item that should have been rejected is not, and so on.

Reporting

Think about your reporting needs. You may have a sophisticated data acquisition program already at your plant. If so, you may need only a serial port to send weights out to a remote computer. This solution is probably the easiest way to generate reports customized to your needs. Weights out require fast processors, and you may need a special interface to connect checkweighers to a Programmable Logic Controller (PLC).

Also available are software programs made specifically to collect information from the checkweigher. These programs generate summary reports, tables, graphs, and statistics.

Some checkweighers have reporting and statistics capabilities which can be viewed on-screen or in printouts from internal and external printers. The printouts are a simple and inexpensive way to collect weight records and statistics. However, printouts do not have the dynamic capabilities of data stored in a computer. The control can printout at regular time intervals, at certain times each day, after a given number of items are weighed, when the product setup is changed, and on command.

Process Control

Programmable Logic Controllers (PLC)

PLCs have become more and more standard in manufacturing and packaging industries. Some checkweigher manufacturers have designed PLC interfaces to common PLC formats and can now fit into your lines seamlessly. Ask checkweigher manufacturers what level of integration they provide for PLC support.

Once the checkweigher is integrated with a PLC, the checkweigher is easily controlled through Supervisory Control And Data Acquisition (SCADA) system. SCADA systems are a major benefit of PLC control. SCADA systems provide a single point of control for all the machines controlled by a PLC.

Feedback

Feedback, another form of process control, can track the performance of filler heads and even control the filler to obtain optimal fill weights. If you want to maintain manual control over the fillers, the checkweigher can simply provide a report on each head and trigger an alarm if a head out of tolerance.

The filler is the key to effective fill weight control. The weight distribution of a filled item provides a good measure of the filler performance. The lower the variation of the filler, the better it's performance, and the less product will be given away (Figure 0-15).

If the target weight of a filler is set 2 standard deviations of the fill weight greater than the label weight, 97.5% of the items filled will weigh greater than or equal to the labeled weight. If the filler has a smaller standard deviation, as described by the dashed-line weight distribution in Figure 0-15, the target weight can be much closer to the label weight compared to a less precise filler. The filler will optimize the weight variation when

- The filler is suited to the product
- The filler is in top condition
- There is a uniform product flow entering the filler

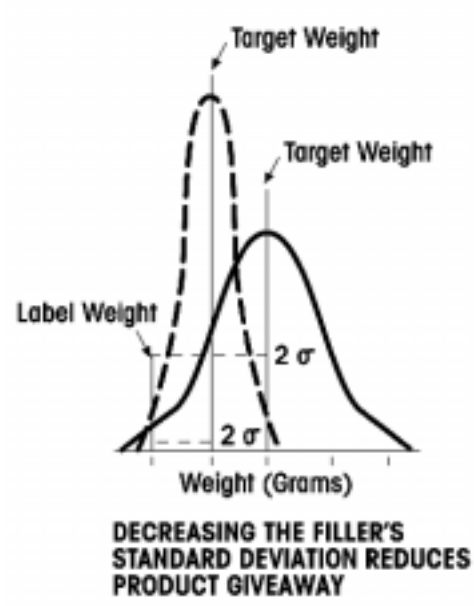

Figure 0-15: Filler Accuracy

Feedback control from a checkweigher can minimize product weight errors and product giveaway introduced by filler drift (Figure 0-16). The drift may be caused by slow changes in the environment or product characteristics.

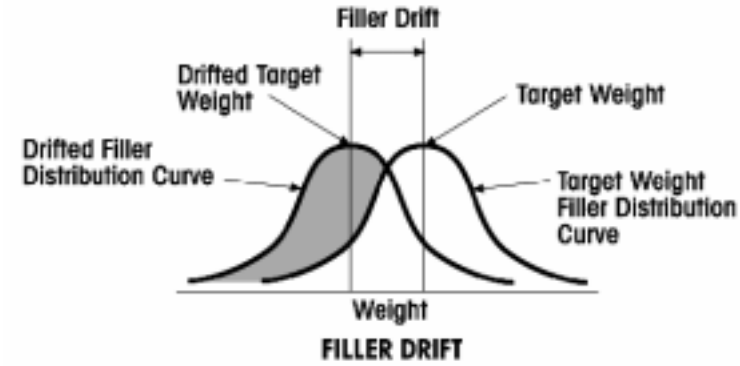

_Figure 0-16: Filler Drift

The checkweigher continuously monitors filled item weight and sends a signal back to the filler when the weight drifts below or above a certain point (Figure 0-17). Step 1 shows a downward filler drift not corrected by the checkweigher. If this trend continues, the fill weight variation will increase and items may be filled underweight.

With checkweigher feedback, a signal is sent to the filler to adjust the fill as in step 2 of Figure 0-17. There is a lag time during which the checkweigher will not signal the

filler to adjust. This lag time is equal to the time it takes to weigh those packages which had already left the filler before the checkweigher signaled a change.

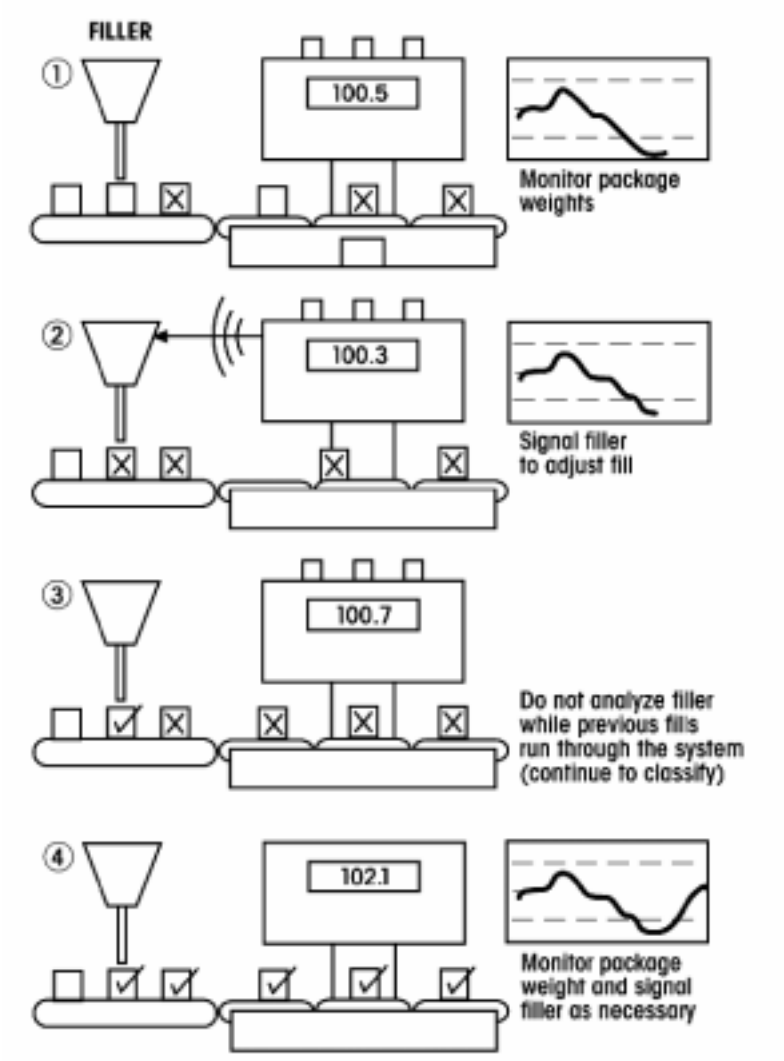

Figure 0-17: Checkweigher Feedback Process to Filler

In Step 4, the downward filler drift is corrected by feedback. The longer the distance between the filler and the checkweigher, the more packages will be between the filler and checkweigher at any particular time. The more packages in the queue to the checkweigher, the lag time for feedback to the filler will increase. Ideally, the checkweigher should be place right next to the filler for the most immediate response to changes in fill weight.

User Interface

As systems grow more complex, user interface is becoming more and more important. If you will need to change products often, make changes to the checkweigher parameters, or use many of its capabilities on a regular basis, look for a checkweigher that minimizes the necessary keystrokes.

If day-to-day operations will not involve much set-up by line operators, if the checkweigher is controlled by a PLC, or if each line runs only a few products for instance, then the number of keystrokes to complete a command may not be so important. SCADA systems will provide a single point and consistent user interface for all the machines controlled b a PLC, and is a major benefit of PLC control.

The size of the weight display and the quality of the graphics may be important when the operator must read the display from a distance away from the checkweigher.

Gradual and Consistent Changes in Product Weight

Floating zone or gliding limit software adjusts the target value and zone limits of a checkweigher to compensate for gradual and consistent changes in product weight. The software detects trends based on short and long term means.

A common application for this software is weighing paper products. Ambient temperature and humidity fluctuations will increase or decrease the moisture content, and thus weight of paper. These changes will occur gradually.

Floating zone software changes the target weight as the running average changes. As moisture collects in the paper, the paper weight increases slowly and appreciably. The target weight and zone limits raise and compensate for the increase in weight (Figure 0-18).

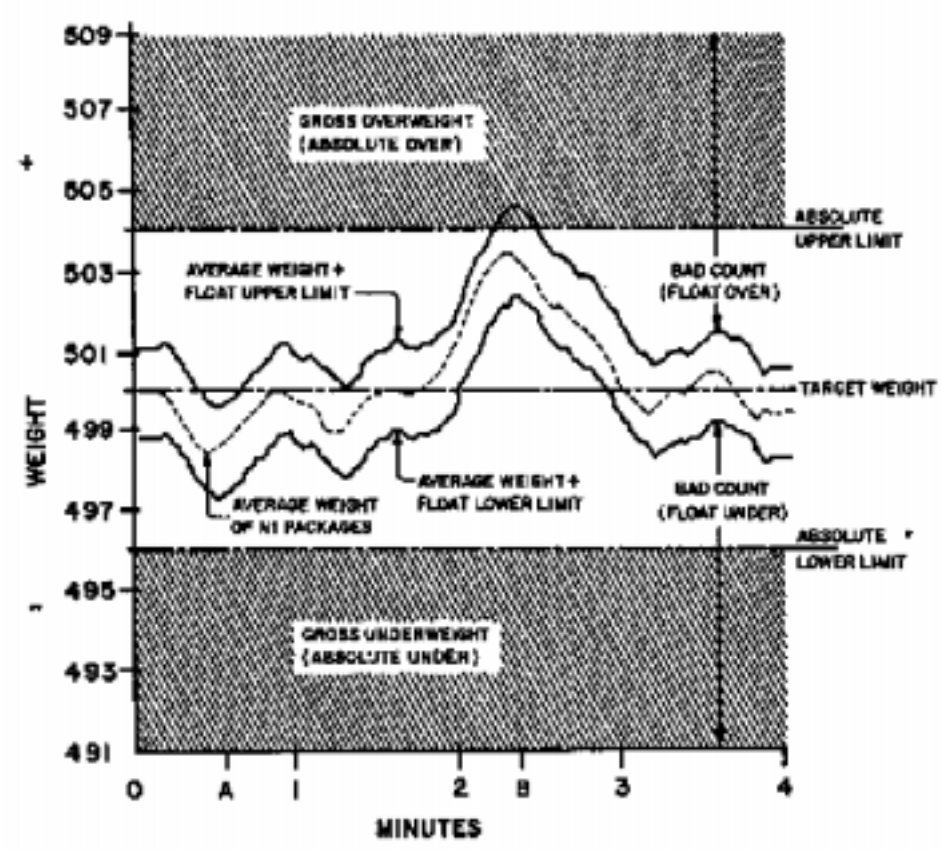

Figure 0-18: Floating Mean

Combination Metal Detector and Checkweigher Systems

In order to minimize complexity and space, as well as to integrate components on a line, many companies offer combined metal detection and checkweighing systems in one package. The systems are easier to install together, and are usually cheaper than buying and integrating two systems.

Manufacturers can provide separate reject stations and statistics, or bring rejects or statistics together at the checkweigher.

Weigh Labelers

Weigh labelers, or weigh price labelers, are dynamic or static scale systems which weigh and print a label with weight and pricing information. The printed price is calculated from the scale's weight output. These scales can be used in industrial or point of sale retail environments. Typical applications are meat and cheese packaging plants and grocery stores. The maximum rate of weigh labeling systems are up to 100 packages per

minute, and are limited by the printer and application. Weigh labelers require Weights and Measures stamped approval.

Product Changeover

Product changeover may involve the adjustment of many attributes including control settings, guiderails, and belt speeds. Most checkweighers have a memory setup for several products, typically 25 to 100 products. Changing products saved in memory can be a matter of pushing a few buttons. Once the timers and limits have been set for a product the first time, the product changeover should be simple.

If you run many products or at many different speeds, look for a **product memory** that will cover your product range. It is probably a good idea to save some room for expansion as well. Some applications, like warehouses may have short runs of thousands of different items and packages. In these cases, some manual setup may be necessary.

You can remotely and automatically change the checkweigher setup by through a **PLC** interface with the checkweigher. This does not include any mechanical changes, like the width of guiderails or chain centers, but includes all the underlying pre-programming of tare weights, zone limits, and variable speed motor control.

Some **guiderails** are quickly adjusted for applications with different item sizes. They can be adjusted without any tools in only a moment.

Some chains are set up to change **centerline** widths quickly. Again, positioning flexibility is very useful if running different sized items consistently. In many applications, it is not necessary to adjust the width of the chain section.

Variable speed drives should be used when running items at different rates, otherwise, some items may be weighed faster than necessary. Variable speed drives are especially useful when package size, spacing, and line rates change from product to product.

Checkweighers can optionally read **bar codes** with scanners and change product and weight setups automatically as an item approaches the scale. Bar-code

scanners are especially useful in warehousing and mail applications where boxes may be filled and checked in any random order.

Safety

Certainly, your checkweigher should match the safety standards in your plant. **Pinch points** should be minimized and guarded. An **emergency stop** may be critical. Some checkweighers come with emergency stops standard, others are an option. Basic safety rules dictate to first eliminate or at least minimize risk, guard, and warn against potentially hazardous actions and machine features.

Also check for **agency approvals**, like UL or CE, and ANSI B155.1 for packaging machinery. Look for **Lockout/Tagout** features, single-drop power supplies, and motor overloads. Also look for low voltage DC input/output signals. Check into tying in emergency stops functions along the whole line, to stop the whole line at any location.

Serviceability and Maintenance

Check out the **service contracts** and **warranties** available with each checkweigher manufacturer. Some warranties provide far better coverage than others. There may be a **service center** near your location or an active network of service technicians. You may save money in the long run and increase the life of your checkweighing system when you purchase a **preventive maintenance** program.

Newer checkweigher systems have been designed for easier maintenance. Parts last longer and can be changed easier. For simple maintenance, look for **quick disconnect electrical connections**, **tool-less** or quick change parts, and **spare parts kits** including belts, chains, bearings and sprockets.

When you do need to order new parts, you may not have time to shut down your line or run without your checkweigher, so it is crucial to order and receive new parts quickly. Inquire about parts supply and service.

Having to wait for parts is a good reason to keep spare parts on hand and be prepared.

4 Before You Contact a Checkweigher Manufacturer

Define Your Checkweighing Goals

Review the introduction of this book and write down your goals for what you want your checkweigher to accomplish. Use the Checkweigher System Specification form in this section to describe the system environment and needs. The specifications will be useful when talking with a checkweigher manufacturer.

What be done with the items rejected from your line? Will they be discarded? Manually inspected? Will the packaging be discarded, and product saved? Will the rejected items be kept for another purpose? The type of reject mechanism you use and the way you collect product may determine how you will need to reject items. See Chapter 3, “How to Choose the Right Checkweigher” to review rejectors and other available checkweigher options.

Checkweigher System Specifications

Goal of Checkweigher: (See Chapter 1)

☐ Reduce Overfills	☐ Eliminate Unders	☐ Counting	☐ Feedback	☐ Inspection	☐ Documentation

Item:

Number of Different items: _____

#	Description	Diam./ Length	Width	Height	Weight	Rate (PPM)
1						
2						
3						
4						
5						
6						

Weight changes:	☐ By batch	☐ Over time	☐ No appreciable change

Attributes:

☐ Open	☐ Closed	☐ Limp	☐ Frozen	☐ Liquid	☐ Unwrapped
☐ Carton	☐ Bag	☐ Can	☐ Bottle/Cup	☐ Stand-up Pouch	☐ Tray

Container: Tare Weight _____ Tare Variance _____ Stability _____

Preferred Transfer Mechanisms _____

Accuracy: (See Chapter 2)

Product weight variance: _____ Desired Accuracy _____

Filler Control	**Unders/Overs by Weight**	**Unders/Overs by Count**
Filler Variance: _____	Filler Variance: _____	Individual Piece Weight: _____

Mechanical Interface: (See Chapter 3)

Upstream Equipment, Type	Speed (PPM)	Item Pitch	Timing
Downstream Equipment, Type	Speed (PPM)	Item Pitch	Timing

Environment:

☐ General Industrial	☐ Washdown	☐ USDA Meat and Poultry	☐ USDA Dairy	☐ Explosion-proof

Electrical Interface: (See Chapter 3)

Power Input: _____ V, _____ phase, _____ Hz, _____ Amp

☐ PLC	☐ Computer/ Data Acquisi-tion	☐ Printer	☐ Line Start/Stop, E-stop	☐ Variable Speed Drive	☐ Filler Feedback

Inspection: (See Chapter 3)

☐ Metal Detection	☐ Flap Detection	☐ Cap Detection	☐ Safety Seal

Quick Cost Savings Calculation

The following section helps you calculate checkweigher payback and cost savings operating with a checkweigher on your filling lines. Complete this Checkweigher Savings Calculation.

The Checkweigher Savings Calculation can be used for fillers and items by count, as long as the weight per piece is known and relatively constant. You can use your own numbers to calculate an accurate yearly savings.

Table 4-1: Checkweigher Savings Calculation

Input	Formula	Result
Package rate per minute	A	
Line operating hours per day	B	
Number of operating days per week	C	
Average overfill per package in grams*	D	
Product cost per gram	E	
Accuracy of the checkweigher in grams at 2 sigma*	F	
Packages per year	A * 60 * B * C * 52	
Current overfill cost per year	G * E * D	
Overfill cost with a checkweigher	G * E * F	
Savings per year with a checkweigher	H-I	
Cost of Checkweigher	K	
Payback in years	K / J	

* In setting the overfill of a filler, we recommend that is should be set no lower than the accuracy of the checkweigher

Consider the following example. A line fills 200 cans per minute, three 8-hour shifts a day, 5 days a week. The average overfill is 10 g, at a cost of $0.0001 per gram. The overfill cost per year is $74,880. With a $19,000 checkweigher with an accuracy of ± 2 g at two standard deviations, you will save $59,904 per year. Checkweigher payback is only 17.4 weeks!

5 Glossary

Accuracy

Accuracy is comprised of the linearity and repeatability of a system, and can be defined for checkweighers as the sum of the **standard deviation** and the **mean error** of the system. See sections 2.4-2.5 for more information on checkweigher accuracy.

Belt Speed

The linear speed of the belt typically measured in feet per minute (fpm) or meters per minute (mpm). The most accurate way to measure is to use a tachometer.

Checkweigher

A mechanism which weighs items as they move along a production line; classifies the items into preset weight zones (typically as overweight, acceptable, and underweight); and ejects or sorts items of unacceptable weight.

Continuous Motion Checkweigher

This type of checkweigher weighs items as they move across the scale weigh pan on a chain or belt conveyor. See also **Intermittent Motion Checkweigher**. The item does not stop on the scale.

Control

The checkweigher electronic console. When triggered by the scale eye, the control weighs and classifies each item and ejects off-weight items from the line.

Deviation from Target

The difference of the actual weight from the target weight, with positive and negative values. It is possible to view the weights as a deviation from the target weight on the checkweigher display panel.

Dovetail Transfers

In cases where the infeed conveyors consist of narrow chain, it is possible to overlap at the transfer point, creating a “dovetail” as in Figure 0-19. This is the highest level of integration and provides the smoothest transfer. Dovetails can also be used between the various checkweigher sections, such as timing and spacing, spacing and scale, and scale and discharge.

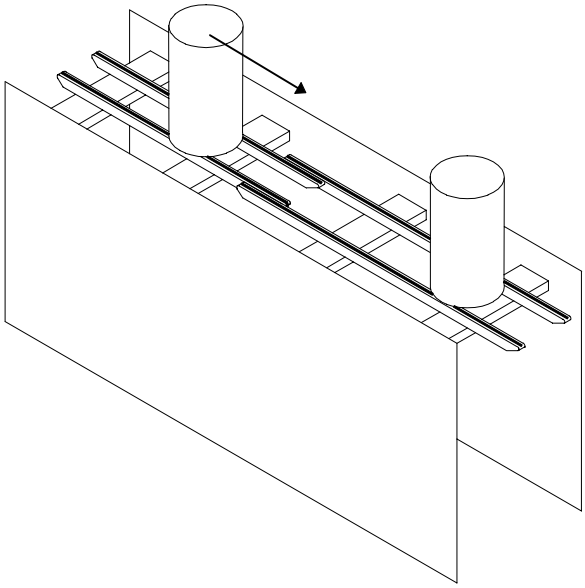

Figure 0-19: Dovetail Transfers

Dynamic Weighing

Dynamic weighing occurs when an item is weighed while in motion over the scale.

Efficiency

This value is the percentage of elapsed time during which the line was running.

Giveaway

The amount by which item weights exceed the label weight. Can be determined per package, as an average, or summation of a group of packages.

Golden Rule

There are three main parameters in measuring the package through put of in-motion packaging equipment: belt speed, packages per minute (PPM), and package pitch as described below. The three are always related by the equation:

Belt Speed = PPM * Pitch

Instantaneous Line Rate (PPM)

If the packages are coming in a slug form or if conditions cause a group of packages to enter the checkweigher, the instantaneous package rate will be greater than the average **Line Rate**. These situations need to be taken into account to guarantee proper minimum spacing. The instantaneous line rate is based on the minimum possible **pitch** in the **Golden Rule** equation. When designing a package handling system, the PPM must be constant through out the system, otherwise severe backups and jams will occur.

Intermittent Motion Checkweigher

This type of checkweigher brings each item to a complete stop on the scale weigh pan, weighs the item, and then discharges it. The checkweigher measures the static weight, not the dynamic weight. See also **Continuous Motion Checkweigher**.

Item

A specific product. For example, if your product is 20-ounce boxes of cereal, an item is a single box of cereal.

Linearity

The error of a measuring system, or the difference between the average actual value and the average measured value of a property. Also called **mean error**.

Line Rate

The number of items per minute the production line is producing; throughput. See also **Instantaneous Line Rate**.

Magnetic Force Restoration (MFR)

The same type of cell used in high precision balances are also used in checkweighers. MFR cells are inherently slower than strain gauge cells. See section 3.1.2.1.2 for more details.

Mean

The sum of all values in a group divided by the number of values in that group.

```
Example:
Given the weights 2, 8, 10,
20, and 25 Kg;   The number
of weights is 5.
The mean equals (2 + 8 + 10
+ 20 + 25)/5 = 13 Kg
```

Mean Error

The difference between the mean of actual data (weights), and the measured data. Also called **linearity**.

Net Weight

The weight of the product in the package.

Normal Distribution

A frequency probability distribution centered around the **mean** of a population of data and following a bell shaped curve (Figure 2-1). The width is determined by the **standard deviation** of the data.

Package Spacing

Gap between products for accurate weighing; pitch.

Pitch

The distance between two packages as they are delivered to the checkweigher. The measurement of pitch is from the leading edge of one package to the leading edge of the next package.

Programmable Logic Controller (PLC)

A central control system from which one can operate and program functions of several independent or dependent systems. A PLC consists of a user interface, central processor, links to subsidiary system controls, and an electrical control interface.

Rejector

A mechanism which removes items from the in-line flow upon receiving a signal from a control system. The rejector often consists of a solenoid-operated valve, air cylinder, and associated mechanical parts.

Repeatability

The **standard deviation**, or variation of the value of an item property, measured several times.

Rezero

Refers to automatic compensation for product buildup on the scale platform or gradual changes in the weight signal from the scale as components age. Hint: To perform a rezero, the control weighs the empty scale. If the rezero is good, the weight is stored and used as a zero reference when weighing the next item.

Scale

The weight sensing assembly of a checkweigher. The scale's electrical output is the weight signal.

Scale Eye

Usually a photoelectric scanner which triggers a weighing cycle when an item interrupts its light beam. Instead of a scale eye on some checkweighers, a cam switch is activated by preceding packaging machinery.

Side Transfer Conveyors

Some production facilities may require a "by-pass" installation. This is accomplished with side transfer conveyors, which allows the customer's existing conveyor to remain intact. The checkweigher is placed in front and parallel to the adjacent conveyor. The side transfer conveyor is placed as close as possible to the customer's conveyor and the belts are almost touching. Guide rails are then put in place to slide the products off the customer's conveyor onto the side transfer conveyor. The side transfer conveyor can then be integrated with the checkweigher infeed or discharge section for smooth transfers. In the event of a break down of the checkweigher, the guide rails can be removed and the products can by-pass the checkweigher.

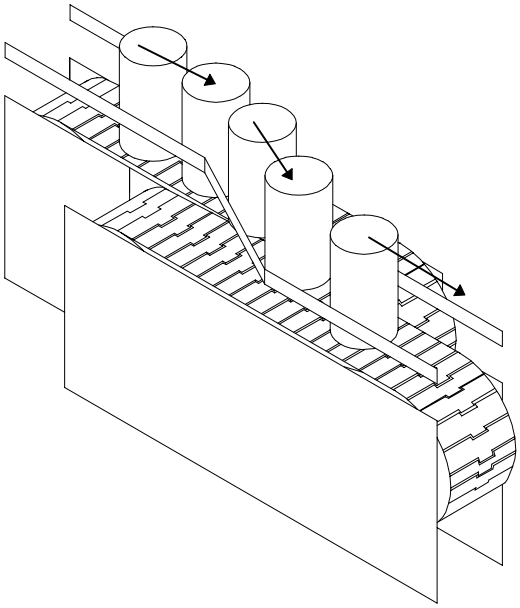

Figure 0-20: Side Transfer Between Two Adjacent Conveyors

Side Transport Conveyors

Some tall, small footprint items cannot easily transfer between conveyors. Side transport belts extend over the discharge of the customer's infeed conveyor and obtain a positive grip on both sides of the product before it reaches the gap between the conveyor and checkweigher. In this way it is suspended between the belts as it travels over the gap and is released onto the infeed section of the checkweigher. The side transports are also used to bridge the gap between the checkweigher discharge section and the following take-away conveyor.

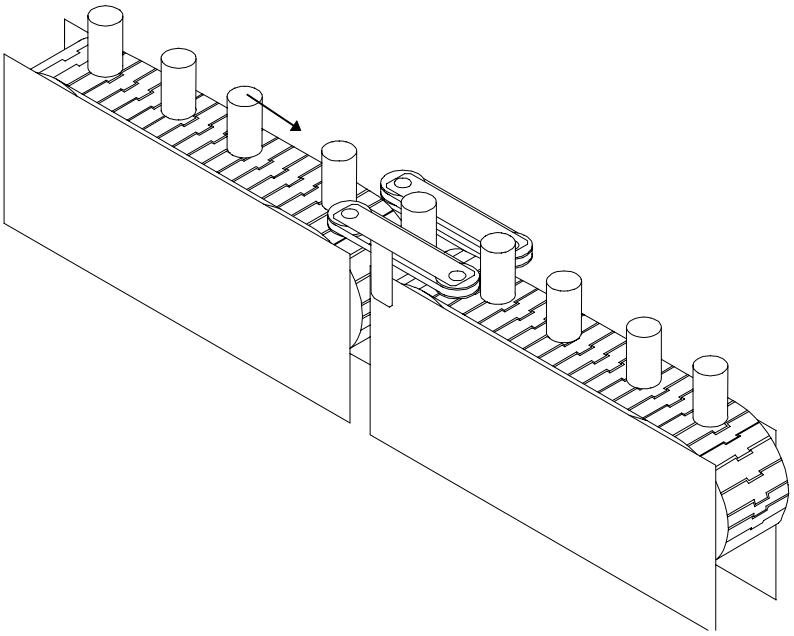

Figure 0-21: Side Transports Between Two Conveyors

Spacing Conveyor

An infeed spacing section is used to speed up packages to create the proper gap for weighing. These sections can be chain or belt, and run faster than the customer's infeed conveyor, thus increasing the gap between packages. In order to be effective, the customer must deliver the product on the same consistent pitch and belt speed that the unit was designed for. Any variations in these will cause spacing errors.

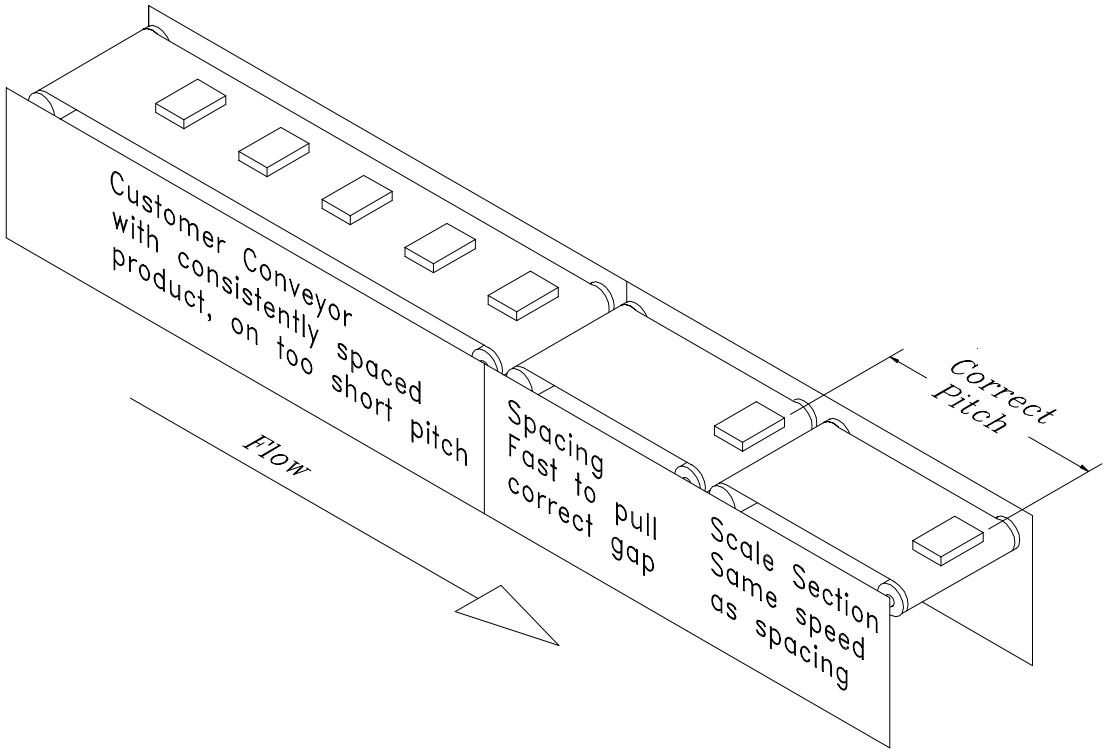

Figure 0-1: Infeed Spacing Belts

Standard Deviation

Standard deviation is the spread of data around a central point. The data must follow a **normal distribution**. A unit of standard deviation can be expressed with the Greek symbol σ (“sigma”)

Static Weighing

Static weighing is the process of weighing an item while it is at rest on a scale platform.

Strain Gauge

The standard strain gauge cell is the most common type of weigh cell used throughout the world, due to its low cost and industrial robustness. Their quick response time are ideal for checkweighing. See section 3.1.2.1.1 for more details.

Tare Weight

This value is the weight of the packaging without any product (i.e., an empty box).

Target Weight

This value is the nominal or desired net product weight.

Timing Conveyor

If the customer cannot guaranty consistent spacing, or if the items are spaced far apart and running very fast, a timing section is used to slow the items down. Slowing them down will cause them to butt-up to one another, thus ensuring consistent package delivery. A spacing section always proceeds a timing section, and gaps the product to the correct pitch for weighing. A timing section can also be chains or belts.

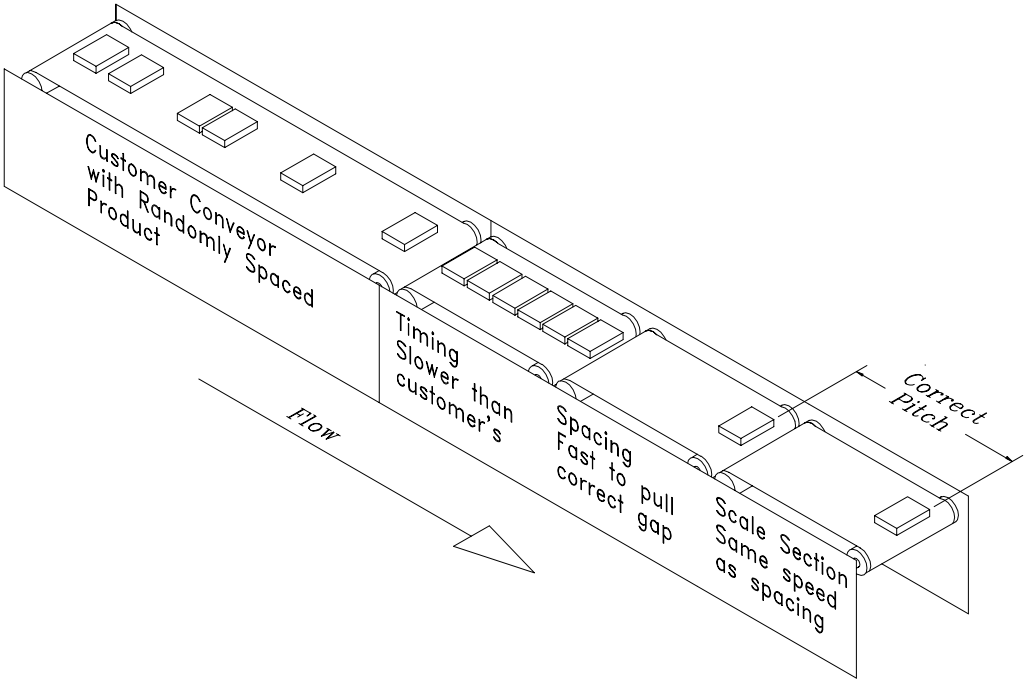

Figure 0-2: Infeed Timing and Spacing Belts

Timing screw (helix, worm)

For certain products such as cans, it is easier to gap them using a timing screw. A timing screw is basically a plastic rod with one long groove cut into it, similar to the thread on a screw. The groove is slightly larger than the can diameter, allowing half of the can to be within the groove. Instead of being a constant pitch like that of a screw, the pitch expands, easily spacing tall unstable products. A wide silent chain is used under the timing screw to carry the products.

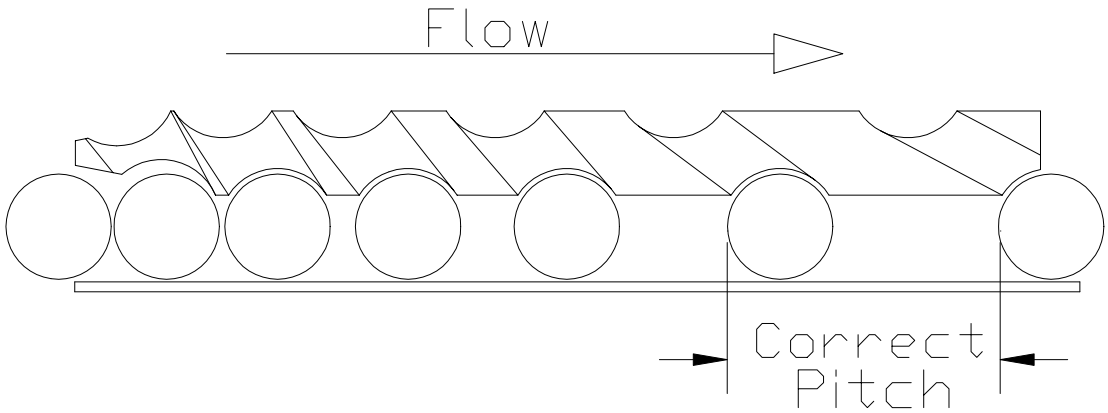

Figure 0-3: Timing Screw

Transients

Spikes on an AC power line which interfere with your control's functioning.

Transport

The product handling mechanism on a checkweigher, such as a conveyor.

Weigh Cells

Different types of weigh cells are used in each product line. The weigh cell is the actual scale component of a checkweigher. See **Magnetic Force Restoration** and **Strain Gauge**.

Weigh Pan

The scale section of all checkweighers is called the weigh pan. The length of the weigh pan is critical in computing the weigh time and determining the maximum package that can be run on that checkweigher

Weigh Time

The amount of time that the package is fully on the scale by itself. This can be computed by subtracting the package length from the weigh pan length and dividing by the belt speed (watch your units). Depending on the mainframe and control, weigh time ranges from 60 milliseconds to over 350 milliseconds.

```
Example:

Given: PPM = 100  Package Length =
200 mm

We decide to use a 305 mm long
weigh pan.  To ensure only one
package on the scale we set the
```

minimum pitch to 355 mm. Using the golden rule we calculate the belt speed: 355 * 100 = 35.5 meters per minute. Our weigh time = (305 - 200)/(35500/60) = .177 seconds. Probably acceptable depending on the type of product and desired accuracy.

Weight Display

Each item's net weight or a variation as a plus or minus from the target weight appears here as the line runs.

Weight Signal

The analog or digital output signal from the scale. On an analog signal; the output voltage is proportional to the weight applied to the scale.

Weight Zone

The range of weights between two consecutive zone limits.

Zone Indicator Lights

These lights flash to show the classification of each product. See Table 3 for an example of color indications.

Table 3: Zone Classification Status

Zone Classification Status		
Color	**Weight Zone - 3 Zone Controls**	**Weight Zone - 5 Zone Controls**
Red	Zone 1 - Underweights	Zone 1 - Underweights
Blue	Not used	Zone 2 - First under (usually acceptable, but light)
White	Zone 2 - Acceptable	Zone 3 - Acceptable
Amber	Not used	Zone 4 - First over (usually acceptable, but heavy)
Green	Zone 3 - Overweight	Zone 5 - Overweight

6 References

These references provide additional information on the topics discussed in this book.

Anderson, D. R.; Sweeney, D. J., ed. *Statistics For Business and Economics, Australian Edition*. St. Paul, MN: Harper Educational, 1989

Brickenkamp, C. S.; Hasko, S.; Natrella, M. G. *NIST Handbook 133- Third Edition, Checking the Contents of Packaged Goods*. Washington D.C.: US Government Printing Office, 1988.

Brickenkamp, C. S.; Hasko, S.; Natrella, M. G. *NIST Handbook 133- Third Edition, Supplement 4*. Washington D.C.: US Government Printing Office, 1988.

Butcher, T. G.; Cotsoradis, C.; Grimes, T. L. *NIST Handbook 44, Specifications, Tolerances, and other Technical Requirements for Weighing and Measuring Devices*. Washington D.C.: US Government Printing Office, 1996.

Davis, G. C. *Packaging Machinery Operations, vol. 14 Weighing and Checkweighing*. Washington D. C.: Packaging Machinery Manufacturers Institute, 1993.

Kochsiek, M. *Fundamentals of Mass Determination*. Greifensee, Switzerland: Mettler-Toledo AG, 1991.

Kochsiek, M. *Mettler-Toledo Glossary of Weighing Terms, A Practical Guide to the Terminology of Weighing*. Greifensee, Switzerland: Mettler-Toledo AG, 1992

Mettler Instrumente AG. *Mettler SQC Brochure, Practical Guide to the Control of Filling Processes*. Greifensee, Switzerland: Mettler Instrumente AG, 1989.

National Electrical Manufacturers Association. *General Standards for Industrial Control and Systems, Standards Publication/ No. ICS 1*. Washington, D. C.: National Electrical Manufacturers Association, 1988.

National Electrical Manufacturers Association. *Standards for Industrial Control Devices, Controllers, and Assemblies, Standards Publication/ No. ICS 2*. Washington, D. C.: National Electrical Manufacturers Association, 1988.

National Fire Protection Association. *National Electric Code 1996*. Quincy, MA: National Fire Protection Association, 1996

Organisation Internationale De Metrologie Legale. *International Recommendation, Automatic Catchweighing Instruments, Part 1 (OIML R 51-1)*. Paris: Bureau International de Metrologie Legale, 1996.

Organisation Internationale De Metrologie Legale. *International Recommendation, Automatic Catchweighing Instruments, Part 2 (OIML R 51-2).* Paris: Bureau International de Metrologie Legale, 1996.

Smith, J. *Electronic Scale Basics*. Rockford, IL: Key Markets Publishing Company, 1991.

About Hi-Speed

Hi-Speed Checkweigher is a leading supplier of checkweighing and material handling products for the packaging industry. Hi-Speed serves customers in the production of pre-packaged goods for Food, Pharmaceutical, Cosmetics, Consumer, Paper, and chemical products.

Founded in 1953, in Watkins Glen, NY, Hi-Speed primarily focused on the production of packaging equipment. Out of an innovative, entrepreneurial style of business, Hi-Speed has developed core technologies in continuous motion weighing, customized package handling, and controls for package weight control and related statistical process control. Members of the Hi-Speed team have invented and patented key technical solutions such as methods in high speed switching or diverting of packages, digital signal processing for fast stable weighing electronics, and methods in high package rate weighing.

In 1989, Hi-Speed Checkweigher joined Mettler-Toledo, Inc., the world's largest weighing and instrumentation company. Hi-Speed has developed a cooperative marketing agreement with it's sister company, Garvens Automation of Germany. With it's parent company, Hi-Speed has sales and service support of it's packaging products across North & South America and around the world. In 1994, Hi-Speed signed a marketing and technology agreement with Allen-Bradley Co. to integrate it's checkweigher controls into the Remote I/O network of the A-B programmable controllers. This allows Hi-Speed checkweighers to seamlessly integrate package weight data and trends for process and statistical control of the packaging line. Hi-Speed achieved ISO 9001 certification in 1997 in a continuing commitment to reach our goal; Satisfy Every Customer Every Time.

Hi-Speed uses it's 44 years of experience in packaging to uniquely solve each customer's package and application needs by balancing the requirements of package rate, environment, accuracy, and package handling.

For additional copies and checkweigher and product handling information, you can contact Hi-Speed at 1-800-836-0836